Clarendon Sixth Form College

Electromagnetics

Electromagnetic Effects (1)

Applicant Study Pack

LEARNING OBJECTIVES

Core	Supplement
• Show understanding that a conductor moving across a magnetic field or a changing magnetic field linking with a conductor can induce an e.m.f. in the conductor • Describe an experiment to demonstrate electromagnetic induction • State the factors affecting the magnitude of an induced e.m.f. Distinguish between direct current (d.c.) and alternating current (a.c.) Describe the construction of a basic transformer with a soft-iron core, as used for voltage transformations • Recall and use the equation (Vp / Vs) = (Np / Ns) • Understand the terms step-up and step-down • Describe the use of the transformer in high-voltage transmission of electricity • Give the advantages of high-voltage transmission	Show understanding that a conductor moving across a magnetic field or a changing magnetic field linking with a conductor can induce an e.m.f. in the conductor • Describe an experiment to demonstrate electromagnetic induction • State the factors affecting the magnitude of an induced e.m.f. Describe and explain a rotating-coil generator and the use of slip rings • Sketch a graph of voltage output against time for a simple a.c. generator • Relate the position of the generator coil to the peaks and zeros of the voltage output Describe the principle of operation of a transformer • Recall and use the equation Ip Vp = Is Vs (for 100% efficiency) • Explain why power losses in cables are lower when the voltage is high

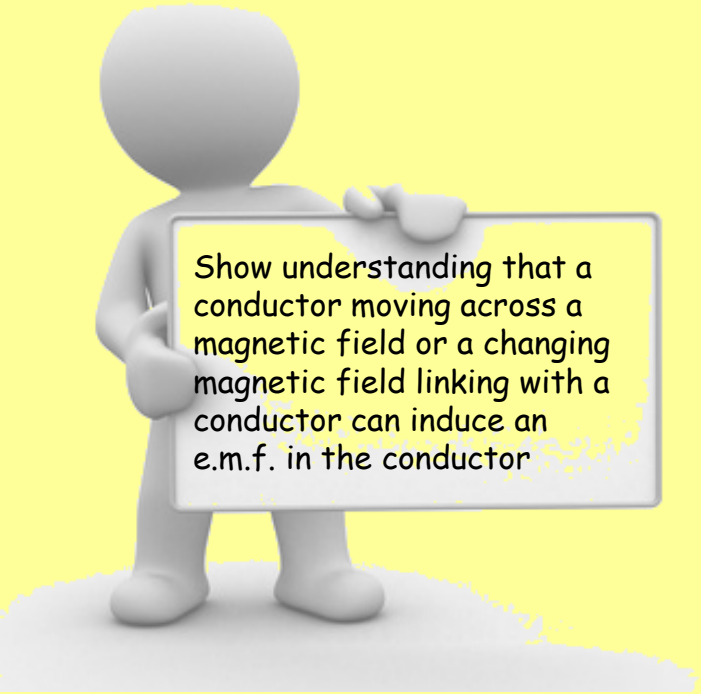
Show understanding that a conductor moving across a magnetic field or a changing magnetic field linking with a conductor can induce an e.m.f. in the conductor


e.m.....what?

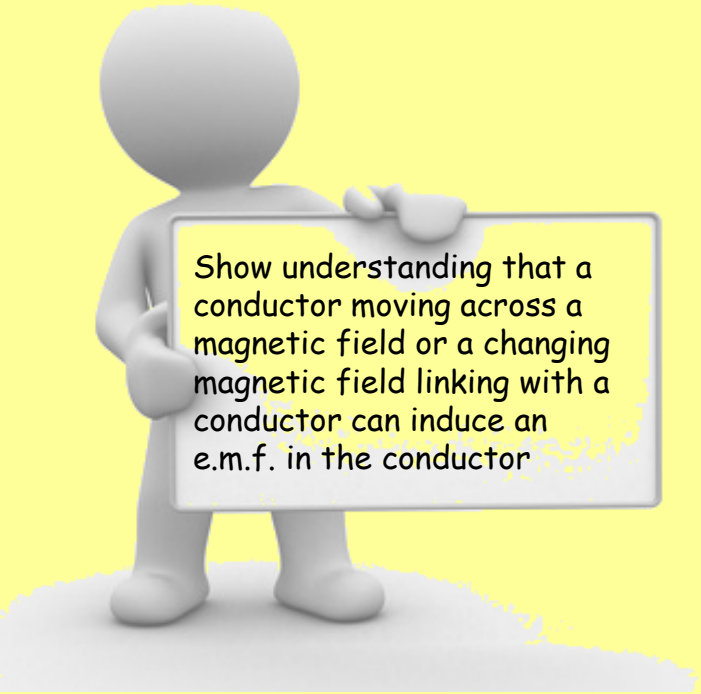

e.m.f. is an abbreviation for **electromotive force**. When **charge** flows through a cell it is given **energy** by the cell. The number of **joules** of energy given to **each coulomb** of charge that passes through the cell is the **e.m.f.** of the cell

e.m.....what?

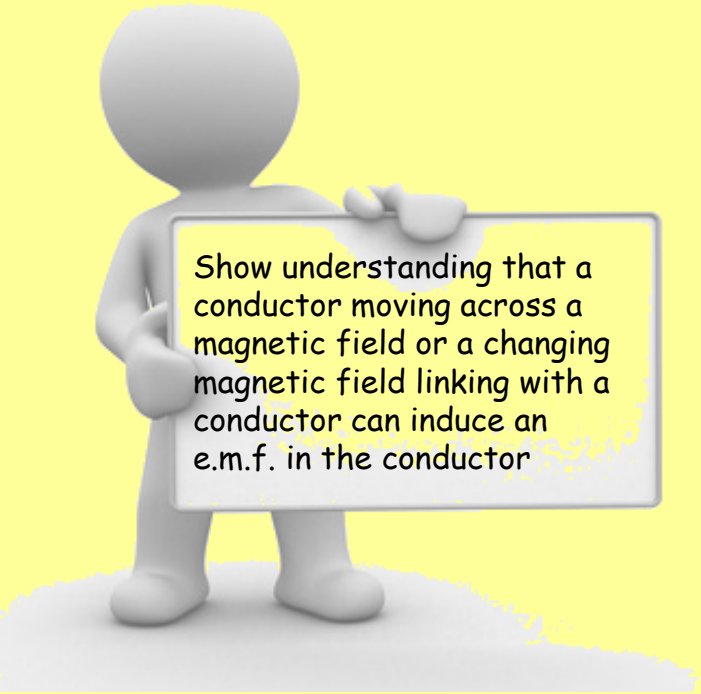

e.m.f. is an abbreviation for **electromotive force**. When **charge** flows through a cell it is given **energy** by the cell. The number of **joules** of energy given to **each coulomb** of charge that passes through the cell is the **e.m.f.** of the cell

e.m.....what?

Energy given to charge? Sounds like e.m.f. = voltage!

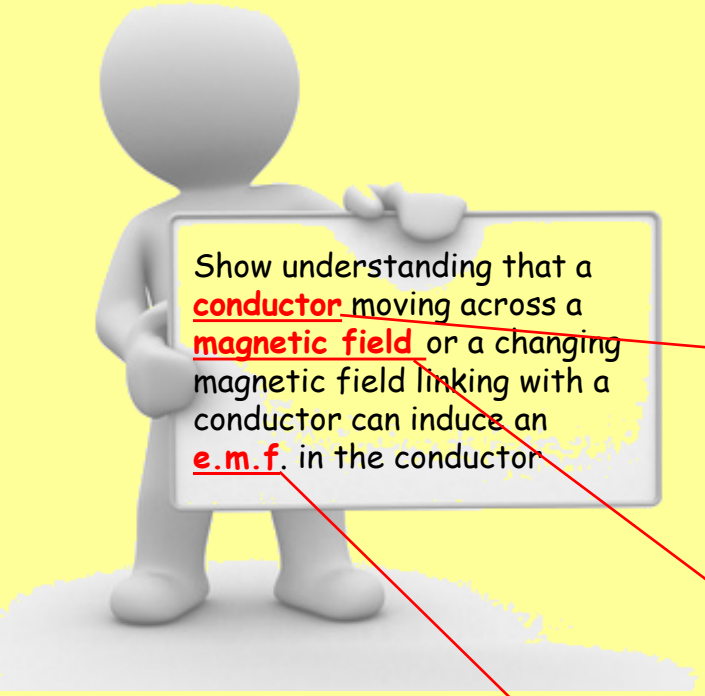

Basically .....

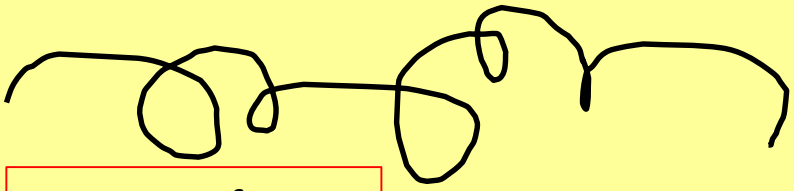

A piece of wire

+

N S

A magnetic field

Movement

=

A small e.m.f is generated

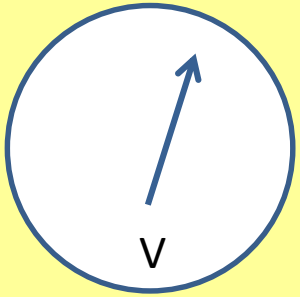

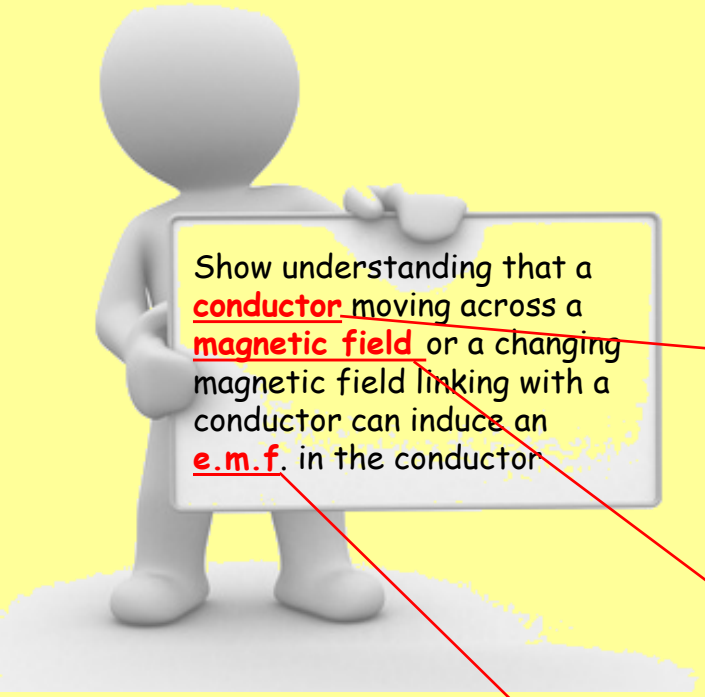

Basically .....

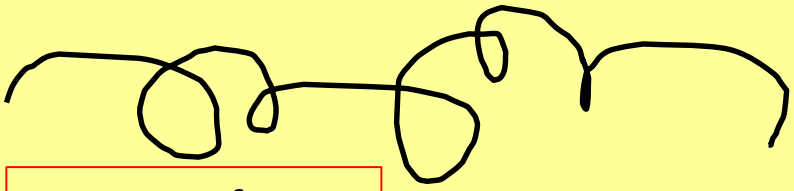

A piece of wire

+

N S

A magnetic field

Movement

=

A small e.m.f is generated

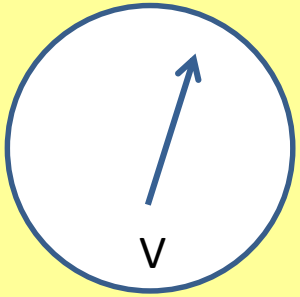

The production of an e.m.f. by **moving a wire** in a **magnetic field** is known as **electromagnetic induction**.

Inducing an e.m.f.

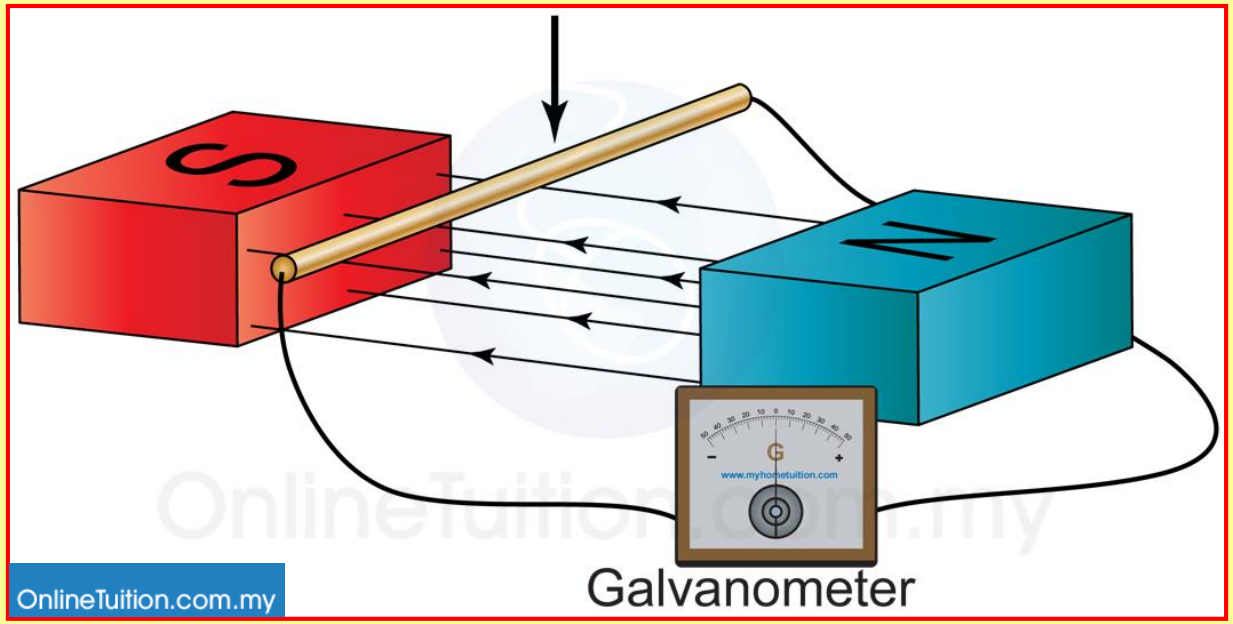

1. Moving the wire downwards through the magnetic field induces an e.m.f. as shown on the galvanometer.

Inducing an e.m.f.

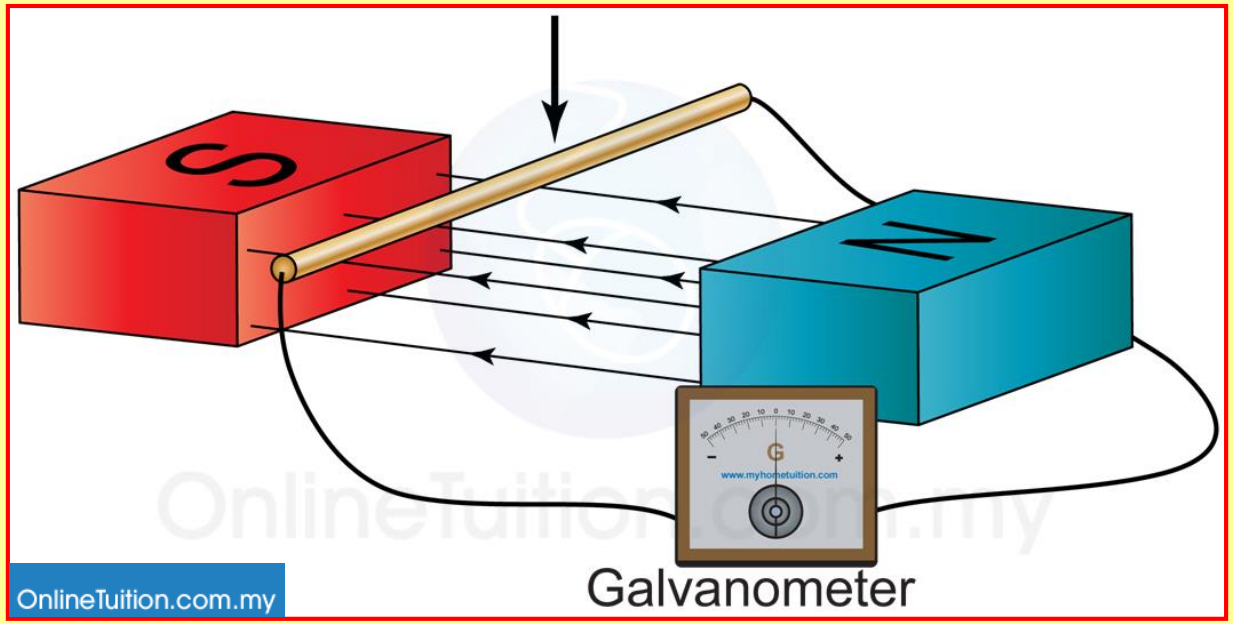

1. Moving the wire downwards through the magnetic field induces an e.m.f. as shown on the galvanometer.

2. Moving the wire upwards through the magnetic field induces an e.m.f. in the opposite direction.

Inducing an e.m.f.

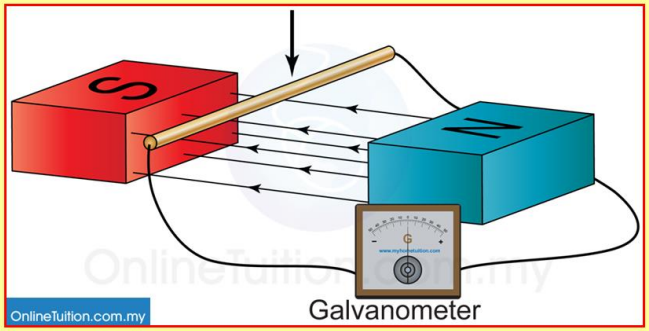

1. Moving the wire downwards through the magnetic field induces an e.m.f. as shown on the galvanometer.

1. Moving the wire upwards through the magnetic field induces an e.m.f. in the opposite direction.

The induced e.m.f. (and current) can be increased by:

- Moving the wire faster
- Using a stronger magnet
- Increasing the length of wire in the magnetic field (eg. By looping the wire several times)

Inducing an e.m.f.

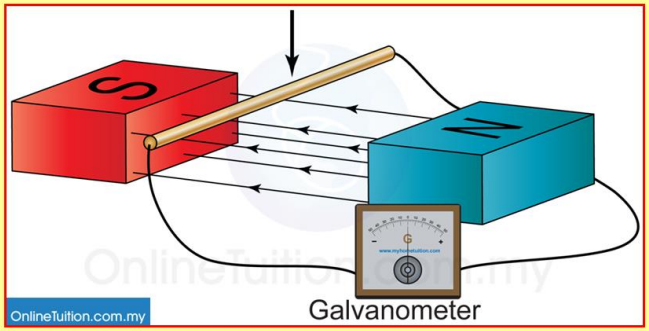

1. Moving the wire downwards through the magnetic field induces an e.m.f. as shown on the galvanometer.

1. Moving the wire upwards through the magnetic field induces an e.m.f. in the opposite direction.

The induced e.m.f. (and current) can be increased by:

- Moving the wire faster
- Using a stronger magnet
- Increasing the length of wire in the magnetic field (eg. By looping the wire several times)

Faraday's law of electromagnetic induction.

"The **e.m.f.** induced in a conductor is **proportional** to the **rate** at which the **magnetic field lines** are **cut** by the **conductor**."

Inducing an e.m.f.

Two options

1. Move the wire in a magnetic field.

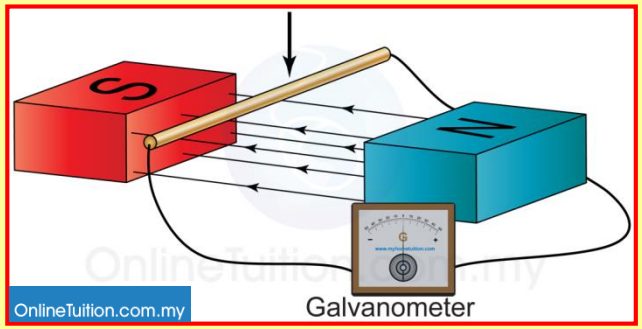

Inducing an e.m.f.

Two options

1. Move the wire in a magnetic field.

2. Move the magnet in a coil of wire.

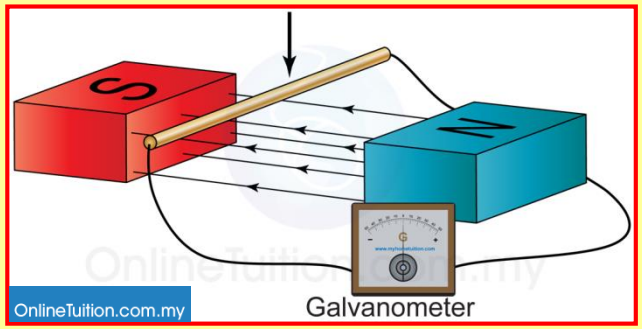

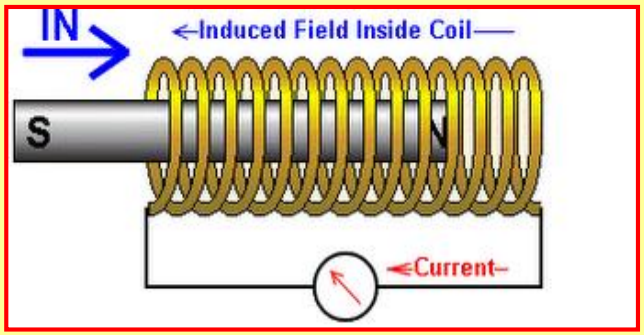

Inducing an e.m.f.

Two options

1. Move the wire in a magnetic field.

2. Move the magnet in a coil of wire.

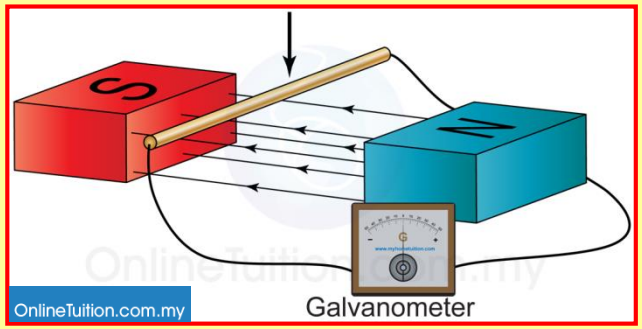

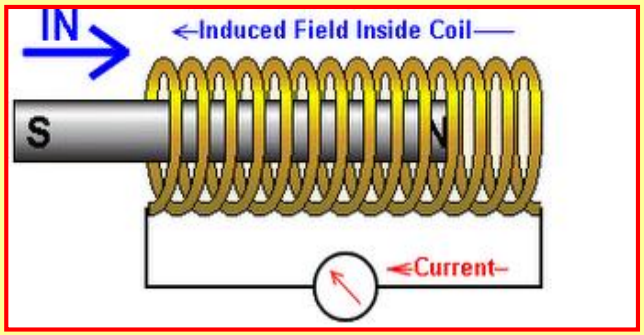

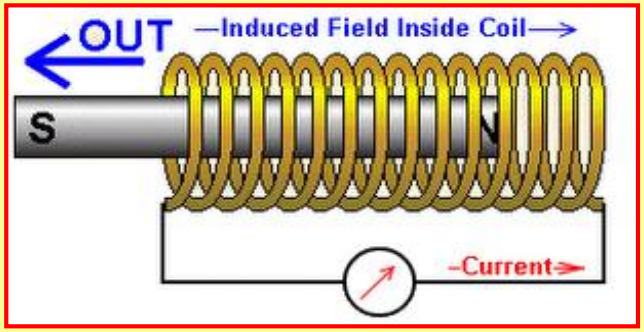

If the **bar magnet** is **pushed** into a **coil of wire**, an e.m.f. is induced in the coil.
If the **magnet** is **withdrawn** from the coil then an e.m.f. is induced in the **opposite direction.**

Inducing an e.m.f.

Two options

1. Move the wire in a magnetic field.

2. Move the magnet in a coil of wire.

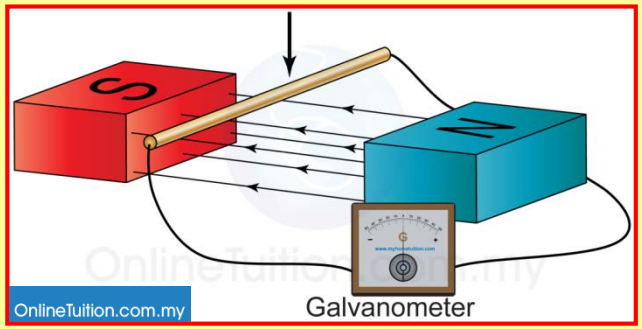

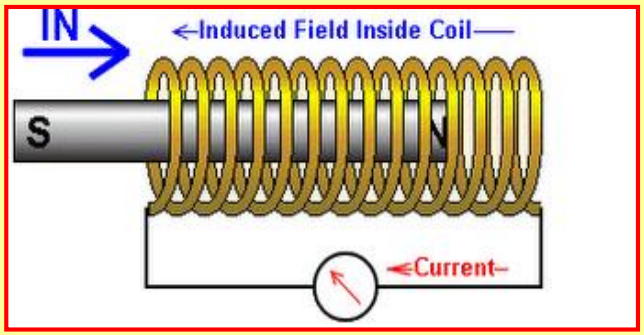

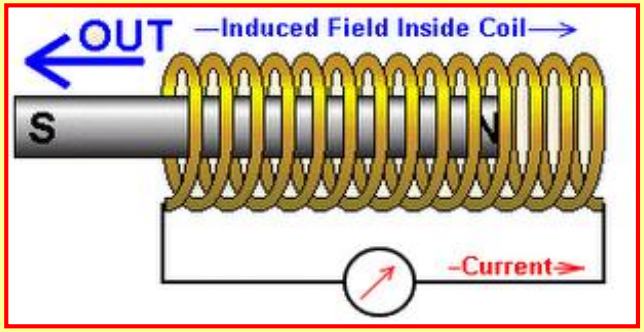

If the **bar magnet** is **pushed** into a **coil of wire**, an e.m.f. is induced in the coil. If the **magnet** is **withdrawn** from the coil then an e.m.f. is induced in the **opposite direction.**

The induced e.m.f. (and current) can be increased by: (1) **moving** the magnet **faster**; (2) using a **stronger magnet**; (3) **increasing** the **turns** on the **coil**.

OK, I understand now about the induced e.m.f. but what's the difference between A.C. and D.C.?

"Distinguish between direct current (d.c.) and alternating current (a.c.)"

OK, I understand now about the induced e.m.f. but what's the difference between A.C. and D.C.?

"Distinguish between direct current (d.c.) and alternating current (a.c.)"

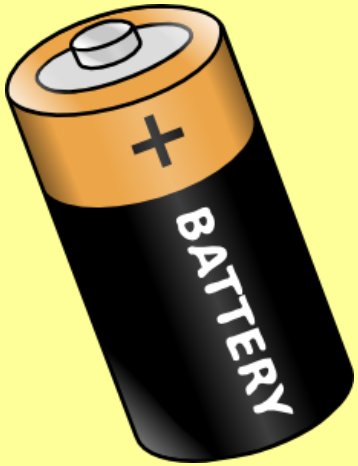

D.C. is **direct current**. The current flows in only **one direction**. **Batteries** and **solar cells** supply D.C. electricity.

OK, I understand now about the induced e.m.f. but what's the difference between A.C. and D.C.?

"Distinguish between direct current (d.c.) and alternating current (a.c.)"

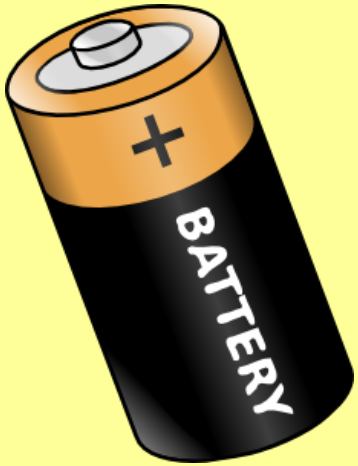

D.C. is **direct current**. The current flows in only **one direction**. **Batteries** and **solar cells** supply D.C. electricity.

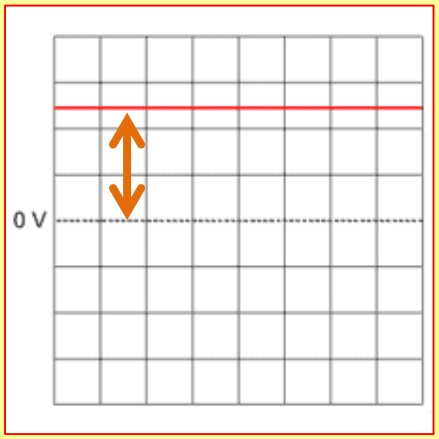

If connected to a **cathode ray oscilloscope** (CRO) the trace on the screen is a **straight line** deflected from the zero line.

OK, I understand now about the induced e.m.f. but what's the difference between A.C. and D.C.?

"Distinguish between direct current (d.c.) and alternating current (a.c.)"

A.C. is **alternating current**. The current **constantly changes** direction. Mains electricity is A.C. UK mains is about **230V**, with a frequency of **50Hz** (hertz).

OK, I understand now about the induced e.m.f. but what's the difference between A.C. and D.C.?

"Distinguish between direct current (d.c.) and alternating current (a.c.)"

A.C. is **alternating current**. The current **constantly changes** direction. Mains electricity is A.C. UK mains is about **230V**, with a frequency of **50Hz** (hertz).

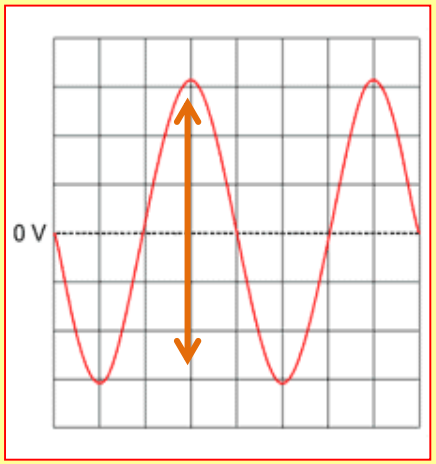

The CRO trace shows that the current is **changing direction 50 times** every second.

Describe and explain a rotating-coil generator and the use of slip rings

Supplement

Hmmm – now this is getting a bit more challenging! Let's go through this step-by-step.

"In electricity generation, a **generator** is a device that converts **mechanical (kinetic) energy** into **electrical energy** for use in an external circuit." – wikipedia.

Supplement

AC generators are also called **alternators**.

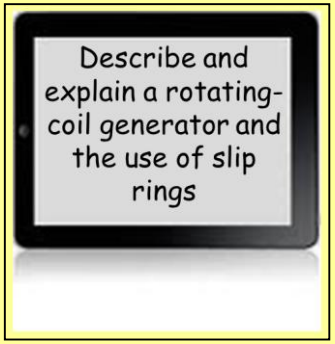

"In electricity generation, a **generator** is a device that converts **mechanical (kinetic) energy** into **electrical energy** for use in an external circuit." – wikipedia.

To build a generator we need two things:

1. A magnetic field
2. A moving wire

Supplement

AC generators are also called **alternators**.

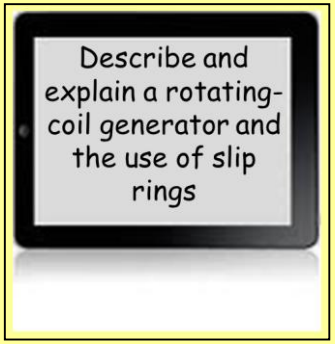

"In electricity generation, a **generator** is a device that converts **mechanical (kinetic) energy** into **electrical energy** for use in an external circuit." – wikipedia.

Supplement

AC generators are also called **alternators**.

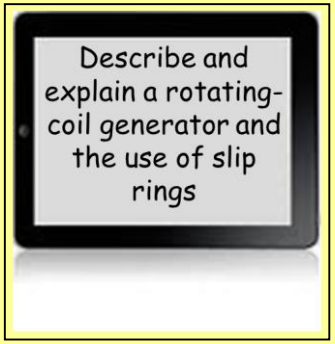

To build a generator we need two things:

1. A magnetic field
2. A moving wire

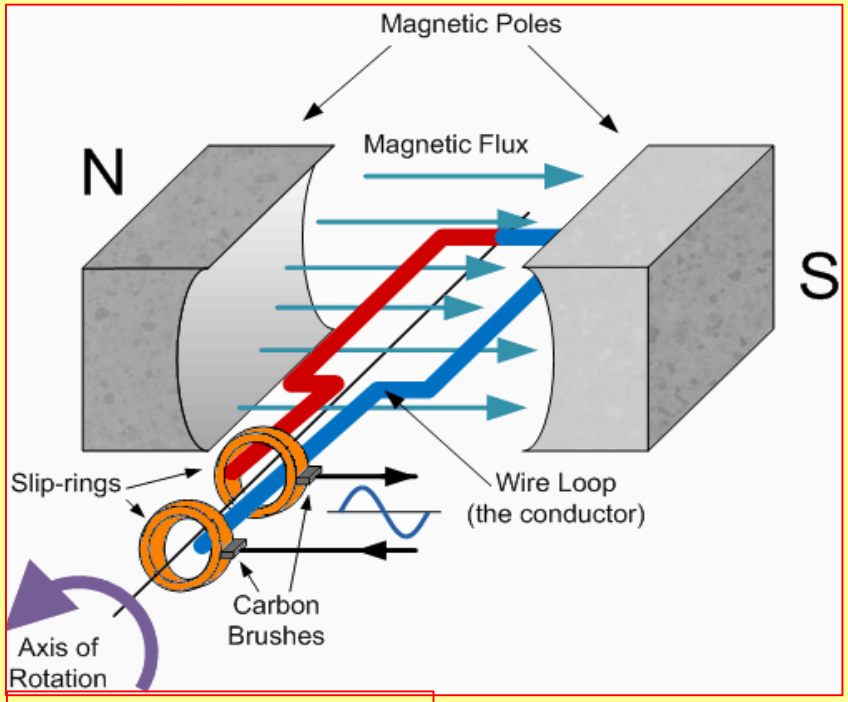

http://nurshiyaam.wordpress.com/

"In electricity generation, a **generator** is a device that converts **mechanical (kinetic) energy** into **electrical energy** for use in an external circuit." – wikipedia.

Supplement

AC generators are also called **alternators**.

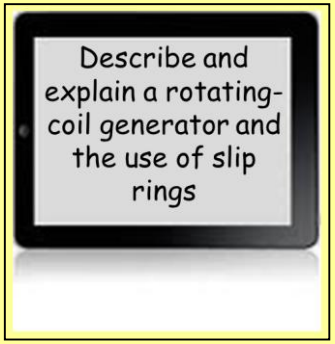

To build a generator we need two things:

1. A magnetic field
2. A moving wire

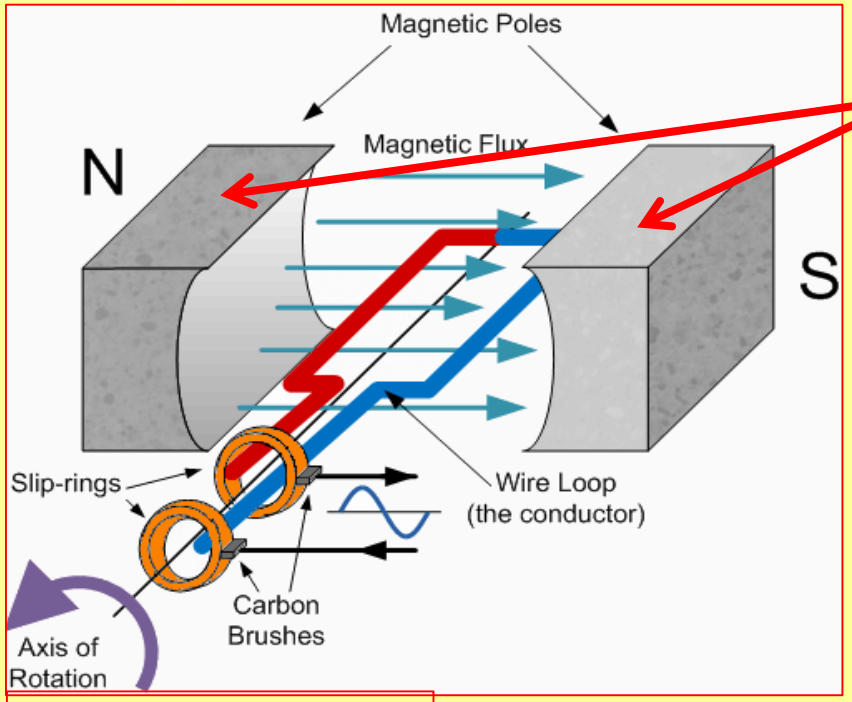

Magnets, producing a **magnetic field.**

http://nurshiyaam.wordpress.com/

"In electricity generation, a **generator** is a device that converts **mechanical (kinetic) energy** into **electrical energy** for use in an external circuit." – wikipedia.

Supplement

AC generators are also called **alternators**.

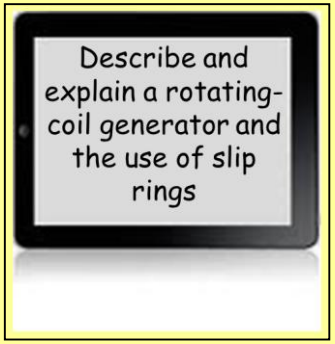

To build a generator we need two things:

1. A magnetic field
2. A moving wire

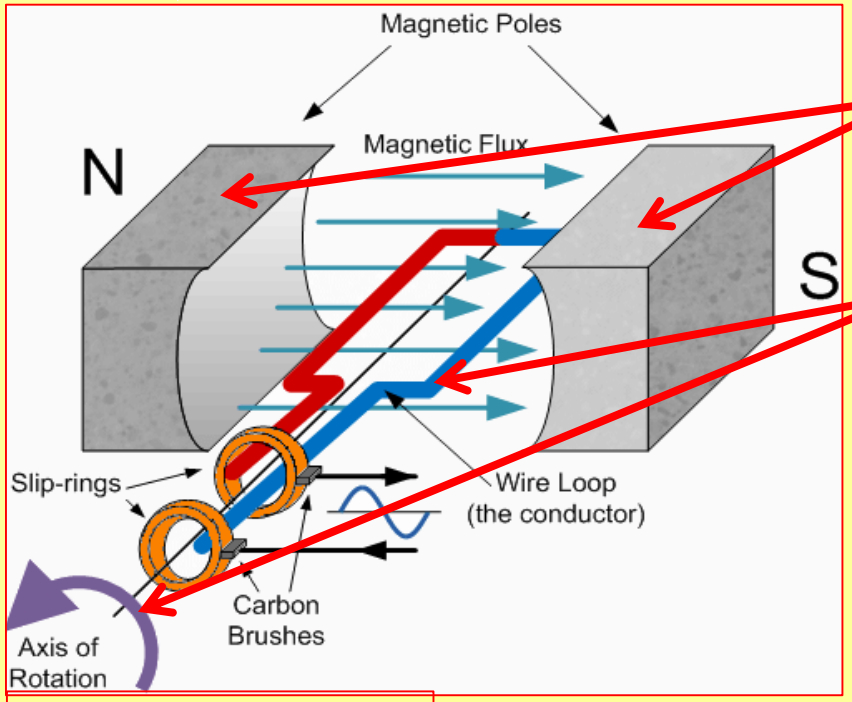

http://nurshiyaam.wordpress.com/

Magnets, producing a **magnetic field**.

Coil, made of insulated copper wire, **rotated** in the magnetic field by **turning the shaft**.

"In electricity generation, a **generator** is a device that converts **mechanical (kinetic) energy** into **electrical energy** for use in an external circuit." – wikipedia.

Supplement

AC generators are also called **alternators**.

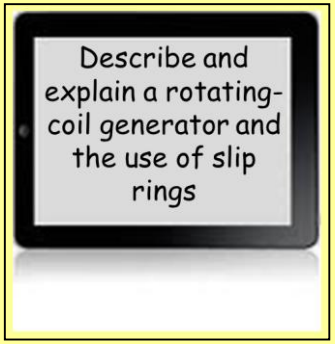

To build a generator we need two things:

1. A magnetic field
2. A moving wire

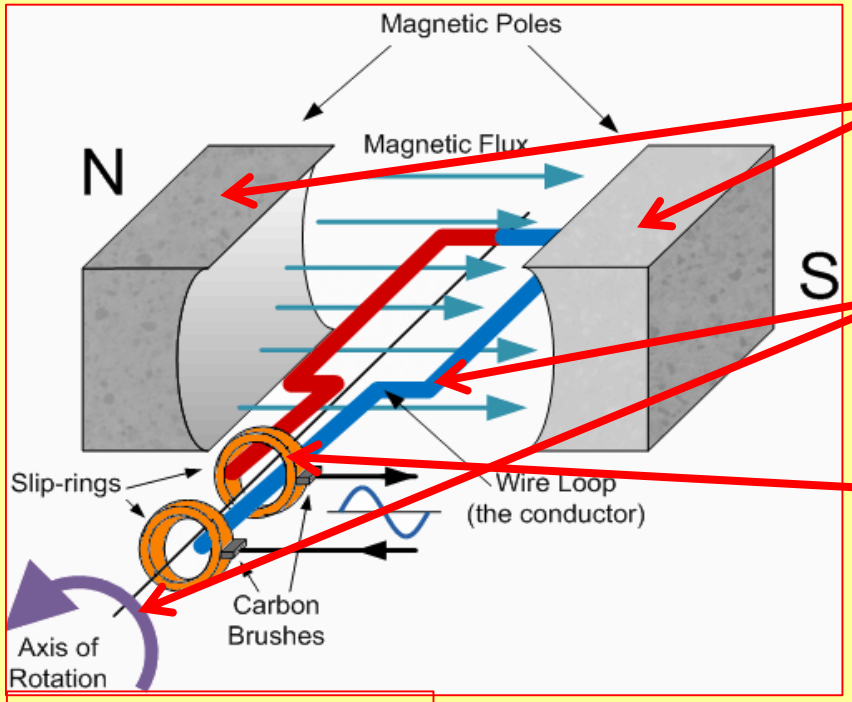

http://nurshiyaam.wordpress.com/

Magnets, producing a **magnetic field**.

Coil, made of insulated copper wire, **rotated** in the magnetic field by **turning the shaft**.

Slip rings are fixed to the coil and **rotate** with it.

"In electricity generation, a **generator** is a device that converts **mechanical (kinetic) energy** into **electrical energy** for use in an external circuit." – wikipedia.

Supplement

AC generators are also called **alternators**.

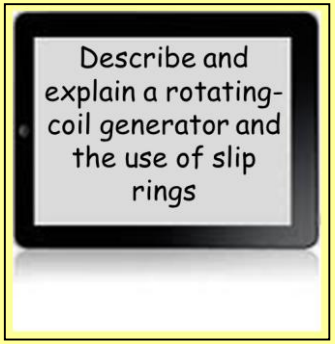

To build a generator we need two things:

1. A magnetic field
2. A moving wire

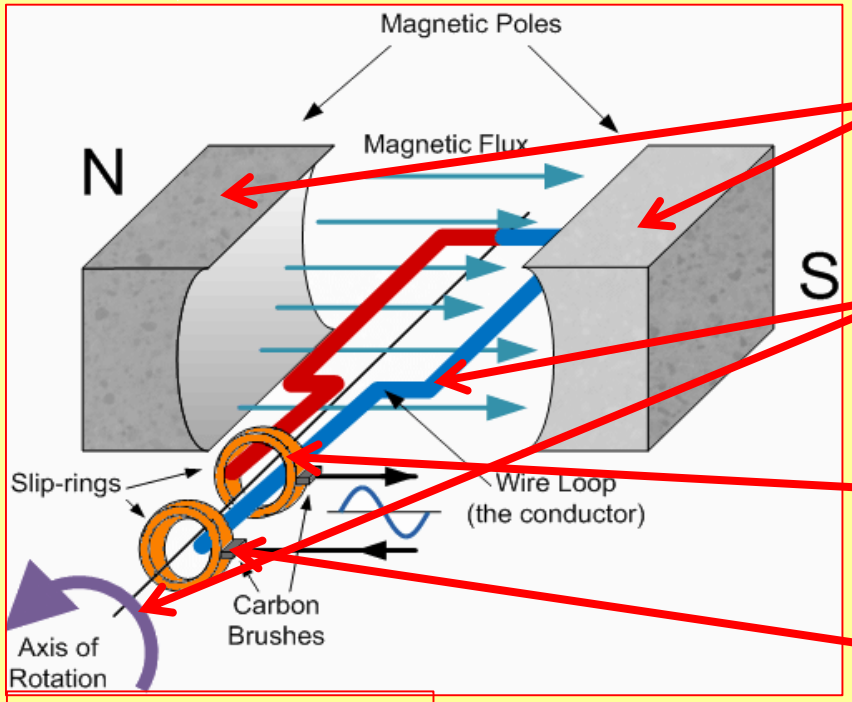

http://nurshiyaam.wordpress.com/

Magnets, producing a **magnetic field**.

Coil, made of insulated copper wire, **rotated** in the magnetic field by **turning the shaft**.

Slip rings are fixed to the coil and **rotate** with it.

Brushes (normally carbon) **rub against** the slip rings.

Supplement

"In electricity generation, a **generator** is a device that converts **mechanical (kinetic) energy** into **electrical energy** for use in an external circuit." – wikipedia.

To build a generator we need two things:

1. A magnetic field
2. A moving wire

AC generators are also called **alternators**.

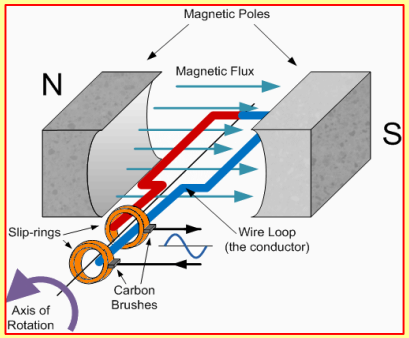

Describe and explain a rotating-coil generator and the use of slip rings

Slip ring detail

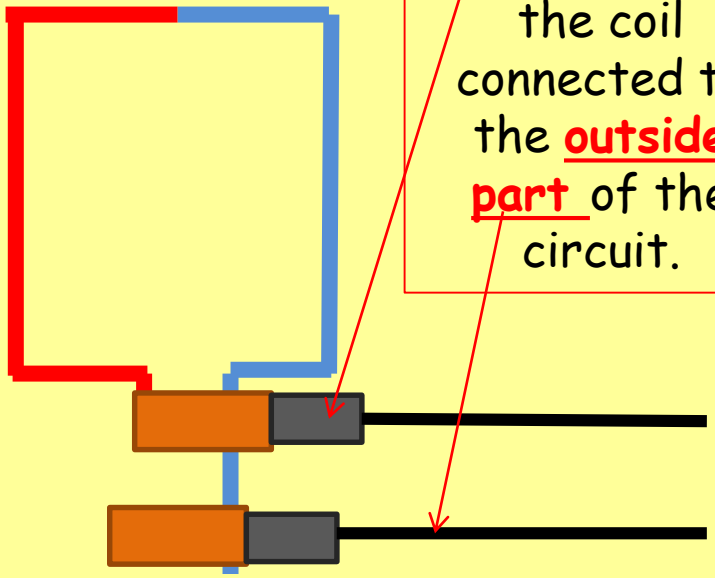

Brushes keep the coil connected to the **outside part** of the circuit.

Supplement

"In electricity generation, a **generator** is a device that converts **mechanical (kinetic) energy** into **electrical energy** for use in an external circuit." – wikipedia.

To build a generator we need two things:

1. A magnetic field
2. A moving wire

AC generators are also called **alternators**.

Describe and explain a rotating-coil generator and the use of slip rings

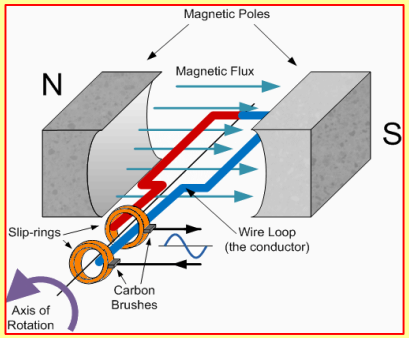

Slip ring detail

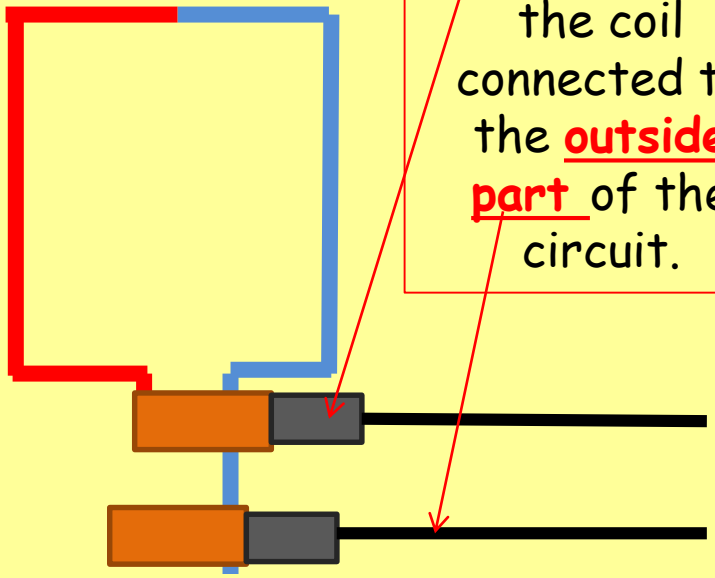

Brushes keep the coil connected to the **outside part** of the circuit.

As the coil **rotates**, it **cuts magnetic** field lines, so an **EMF is generated**, and a current flows.

"In electricity generation, a **generator** is a device that converts **mechanical (kinetic) energy** into **electrical energy** for use in an external circuit." – wikipedia.

Supplement

AC generators are also called **alternators**.

Describe and explain a rotating-coil generator and the use of slip rings

To build a generator we need two things:

1. A magnetic field
2. A moving wire

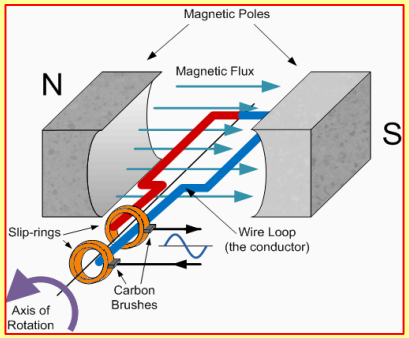

Slip ring detail

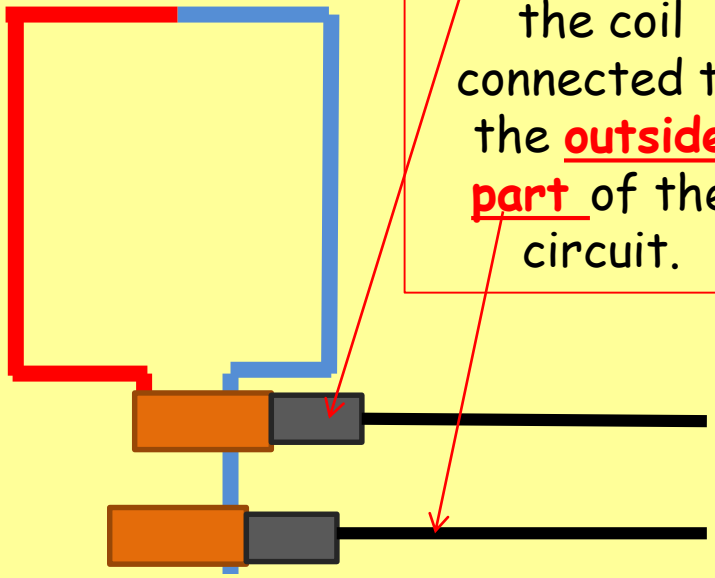

Brushes keep the coil connected to the **outside part** of the circuit.

As the coil **rotates**, it **cuts magnetic** field lines, so an **EMF is generated**, and a current flows.

The **slip rings** keep the coil in contact with the brushes **throughout the rotation**, and as a result the current flows in **alternate directions**, producing an **alternating current (AC).**

"In electricity generation, a **generator** is a device that converts **mechanical (kinetic) energy** into **electrical energy** for use in an external circuit." – wikipedia.

Supplement

AC generators are also called **alternators**.

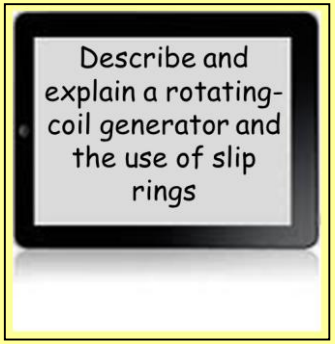

To build a generator we need two things:

1. A magnetic field
2. A moving wire

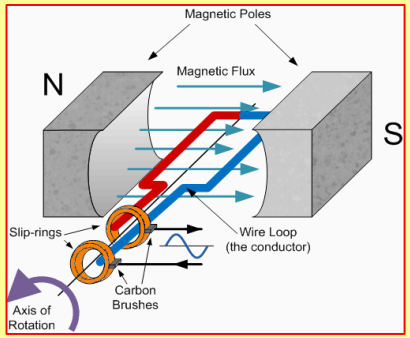

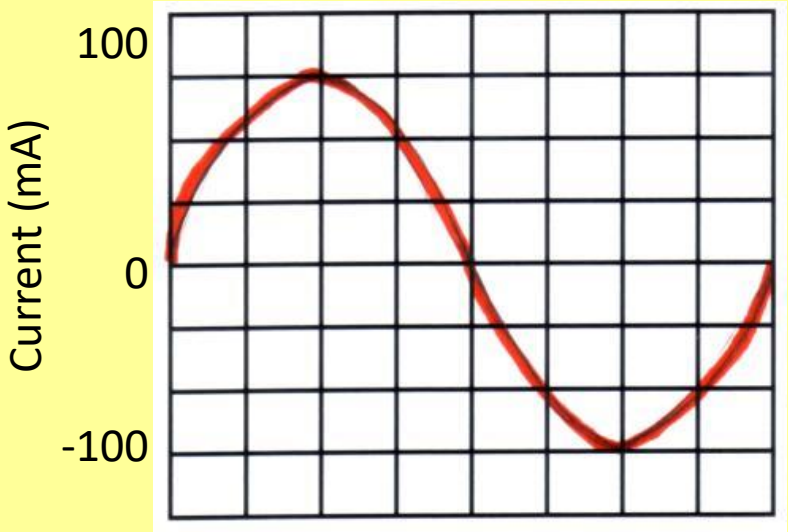

N

S

"In electricity generation, a **generator** is a device that converts **mechanical (kinetic) energy** into **electrical energy** for use in an external circuit." – wikipedia.

Supplement

AC generators are also called **alternators**.

Describe and explain a rotating-coil generator and the use of slip rings

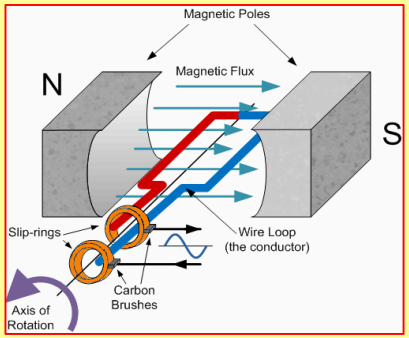

To build a generator we need two things:

1. A magnetic field
2. A moving wire

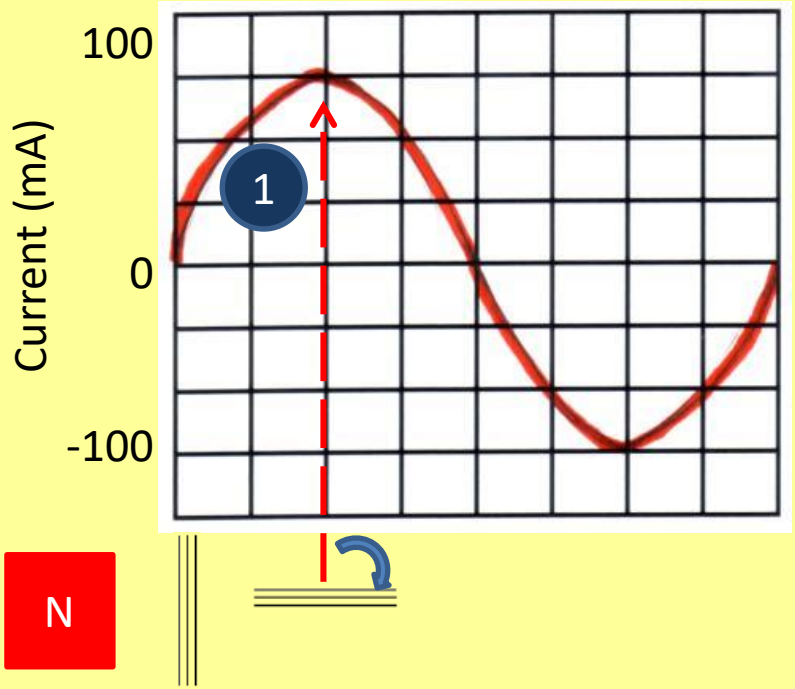

1 = maximum **forward** current

"In electricity generation, a **generator** is a device that converts **mechanical (kinetic) energy** into **electrical energy** for use in an external circuit." – wikipedia.

Supplement

AC generators are also called **alternators**.

Describe and explain a rotating-coil generator and the use of slip rings

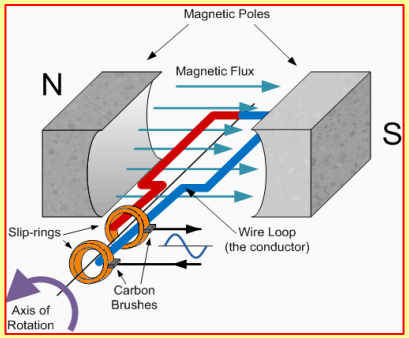

To build a generator we need two things:

1. A magnetic field
2. A moving wire

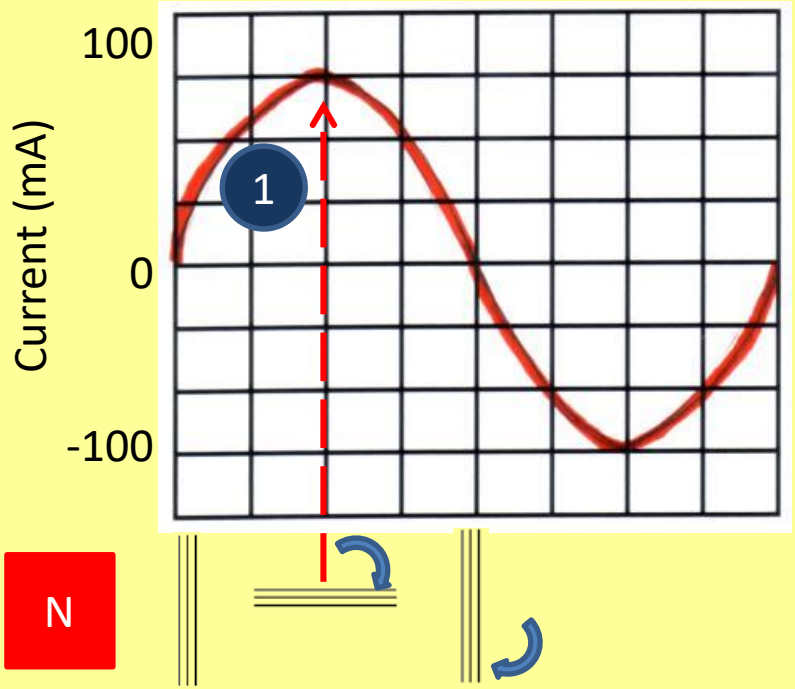

1 = maximum **forward** current

"In electricity generation, a **generator** is a device that converts **mechanical (kinetic) energy** into **electrical energy** for use in an external circuit." – wikipedia.

Supplement

AC generators are also called **alternators**.

Describe and explain a rotating-coil generator and the use of slip rings

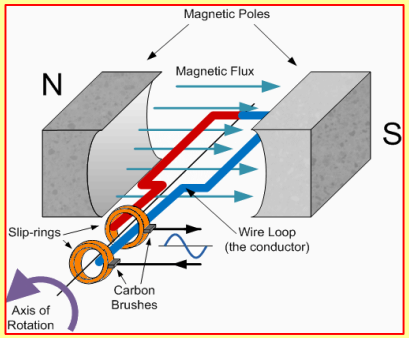

To build a generator we need two things:

1. A magnetic field
2. A moving wire

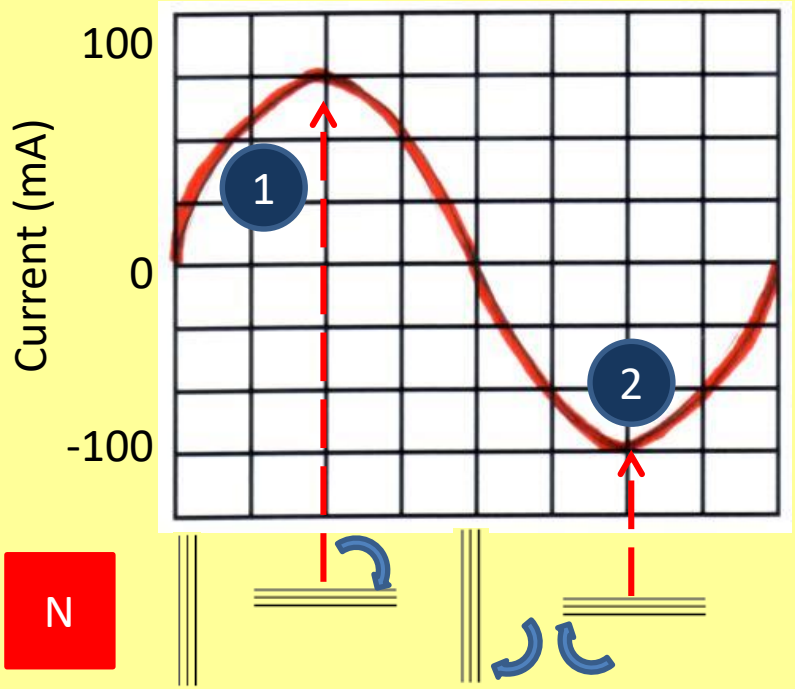

1 = maximum **forward** current

2 = maximum **reverse** current

"In electricity generation, a **generator** is a device that converts **mechanical (kinetic) energy** into **electrical energy** for use in an external circuit." – wikipedia.

Supplement

AC generators are also called **alternators**.

Describe and explain a rotating-coil generator and the use of slip rings

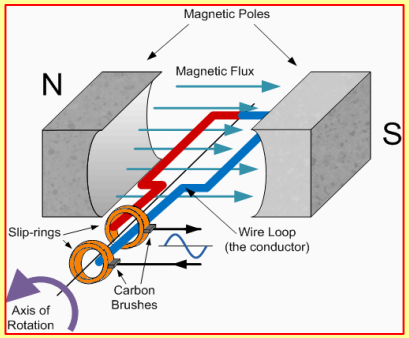

To build a generator we need two things:

1. A magnetic field
2. A moving wire

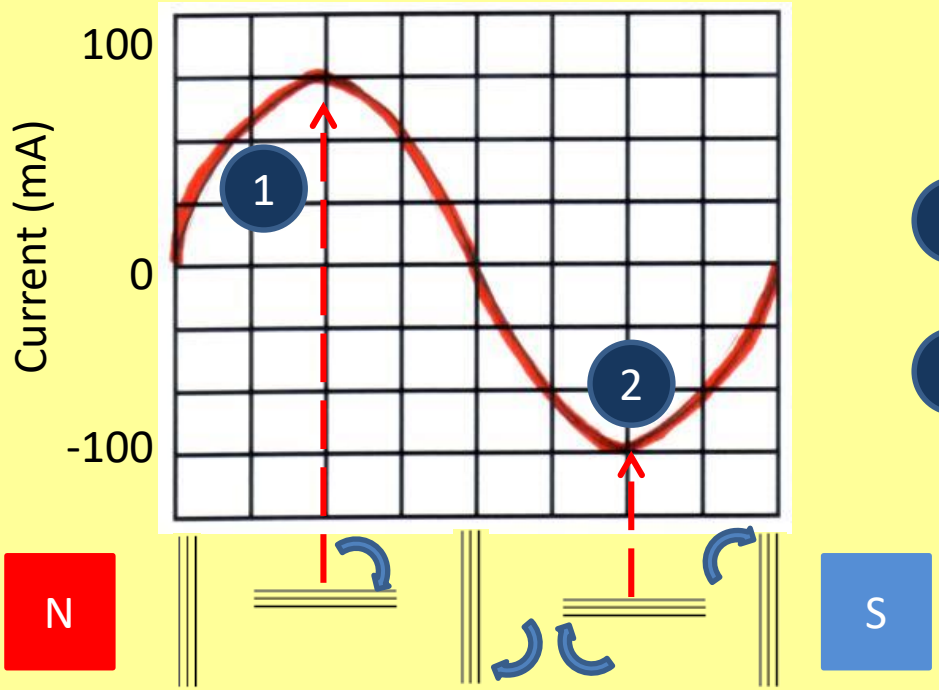

1 = maximum **forward** current

2 = maximum **reverse** current

"In electricity generation, a **generator** is a device that converts **mechanical (kinetic) energy** into **electrical energy** for use in an external circuit." – wikipedia.

Supplement

AC generators are also called **alternators**.

Describe and explain a rotating-coil generator and the use of slip rings

To build a generator we need two things:

1. A magnetic field
2. A moving wire

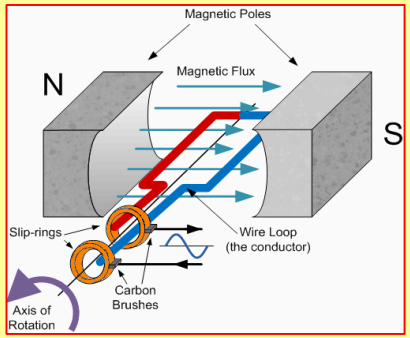

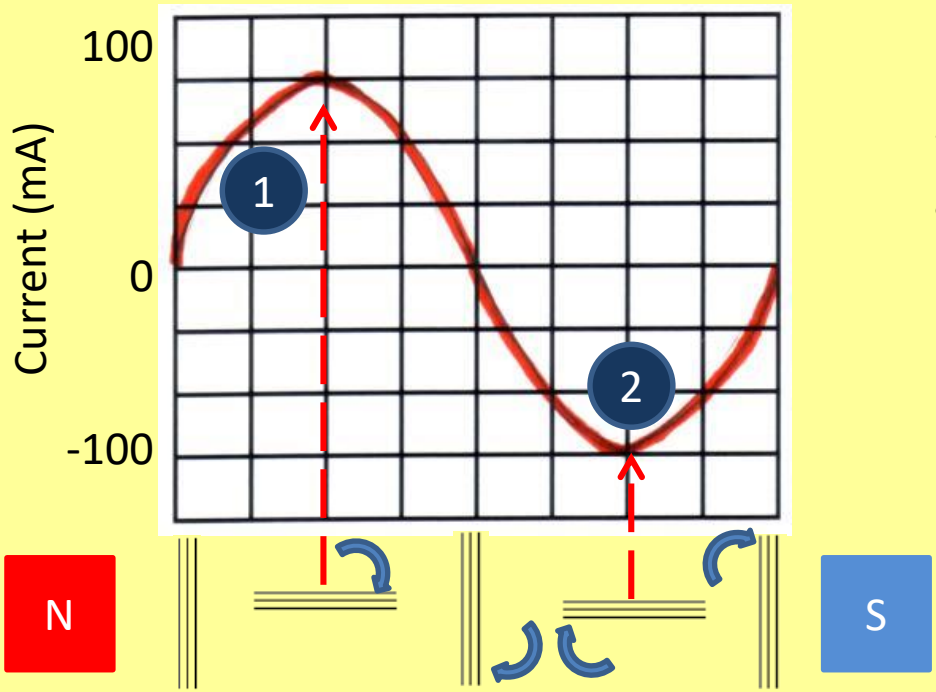

The maximum EMF can be **increased** by:

- Increasing the **number of turns** on the coil.

"In electricity generation, a **generator** is a device that converts **mechanical (kinetic) energy** into **electrical energy** for use in an external circuit." – wikipedia.

Supplement

AC generators are also called **alternators**.

Describe and explain a rotating-coil generator and the use of slip rings

To build a generator we need two things:

1. A magnetic field
2. A moving wire

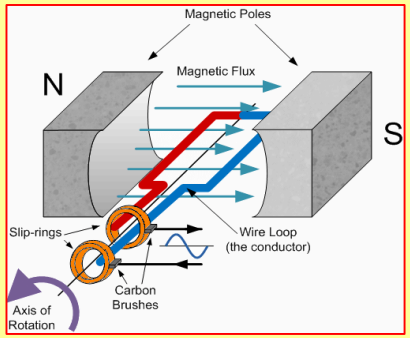

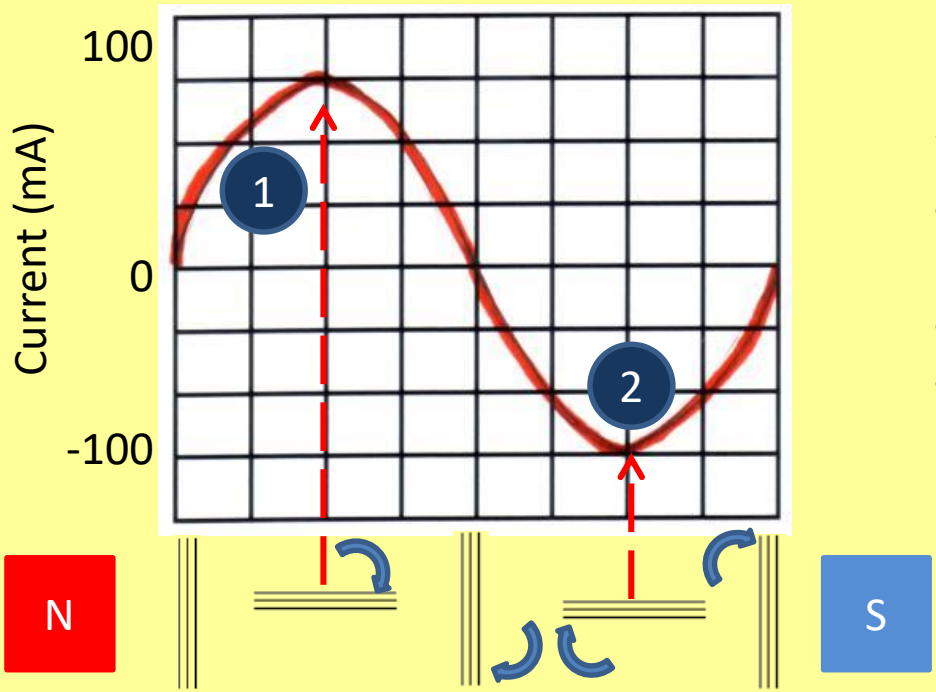

The maximum EMF can be **increased** by:

- Increasing the **number of turns** on the coil.
- Increasing the **area** of the coil.
- Using a **stronger** magnet.

"In electricity generation, a **generator** is a device that converts **mechanical (kinetic) energy** into **electrical energy** for use in an external circuit." – wikipedia.

Supplement

AC generators are also called **alternators**.

Describe and explain a rotating-coil generator and the use of slip rings

To build a generator we need two things:

1. A magnetic field
2. A moving wire

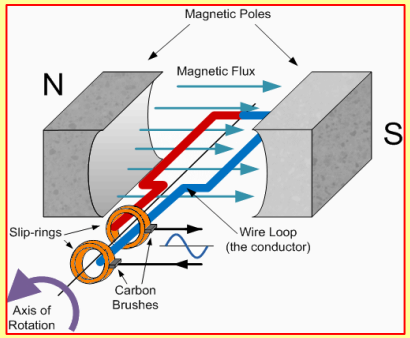

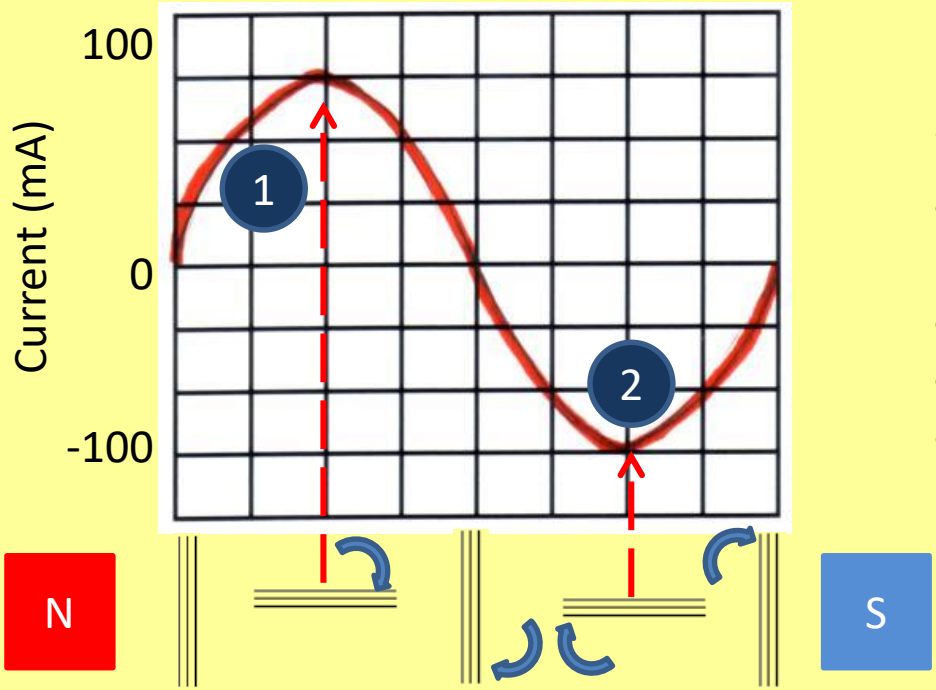

The maximum EMF can be **increased** by:

- Increasing the **number of turns** on the coil.
- Increasing the **area** of the coil.
- Using a **stronger** magnet.
- **Rotating** the coil **faster**.

Transmission of electricity

LEARNING OBJECTIVES

Core	Supplement
• Show understanding that a conductor moving across a magnetic field or a changing magnetic field linking with a conductor can induce an e.m.f. in the conductor • Describe an experiment to demonstrate electromagnetic induction • State the factors affecting the magnitude of an induced e.m.f. Distinguish between direct current (d.c.) and alternating current (a.c.) Describe the construction of a basic transformer with a soft-iron core, as used for voltage transformations • Recall and use the equation (Vp / Vs) = (Np / Ns) • Understand the terms step-up and step-down • Describe the use of the transformer in high-voltage transmission of electricity • Give the advantages of high-voltage transmission	Show understanding that a conductor moving across a magnetic field or a changing magnetic field linking with a conductor can induce an e.m.f. in the conductor • Describe an experiment to demonstrate electromagnetic induction • State the factors affecting the magnitude of an induced e.m.f. Describe and explain a rotating-coil generator and the use of slip rings • Sketch a graph of voltage output against time for a simple a.c. generator • Relate the position of the generator coil to the peaks and zeros of the voltage output Describe the principle of operation of a transformer • Recall and use the equation Ip Vp = Is Vs (for 100% efficiency) • Explain why power losses in cables are lower when the voltage is high

Transmission of electricity

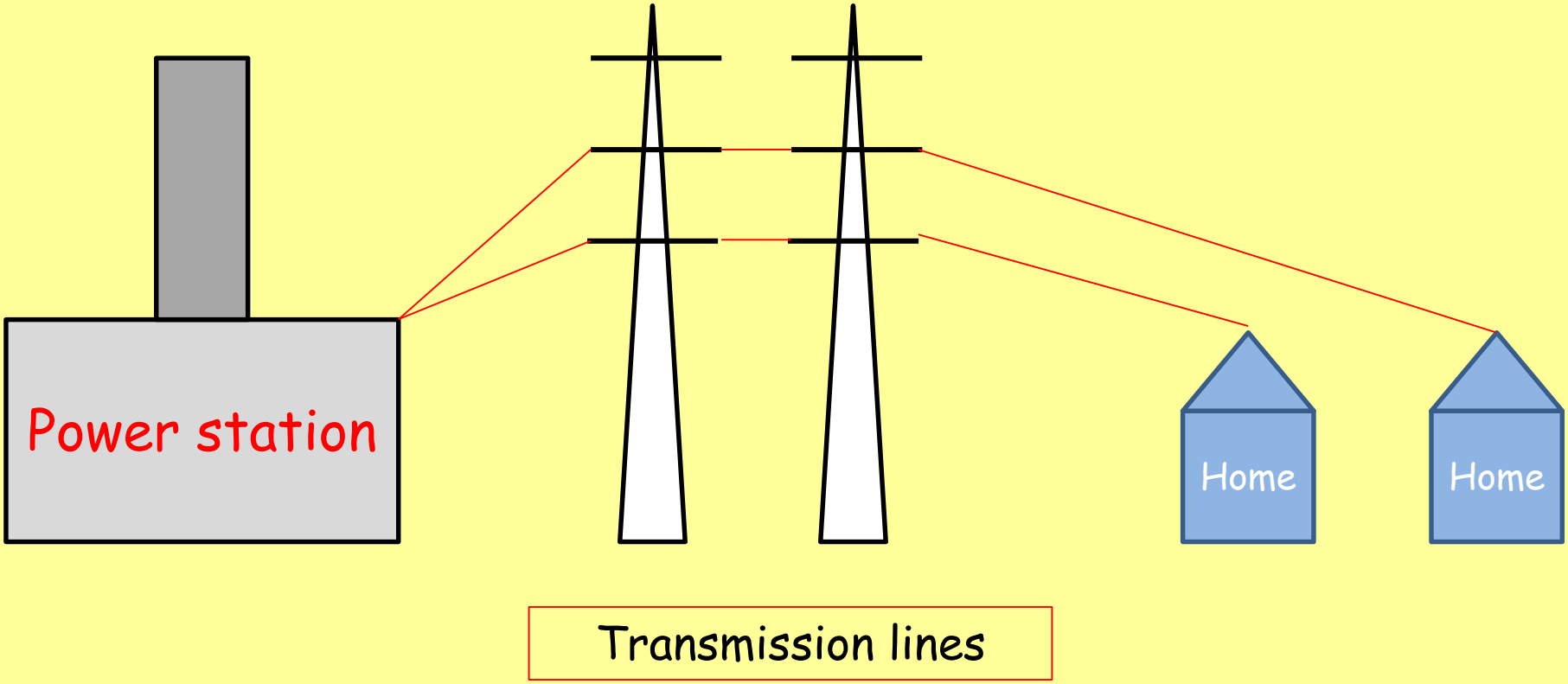

Transmission of electricity

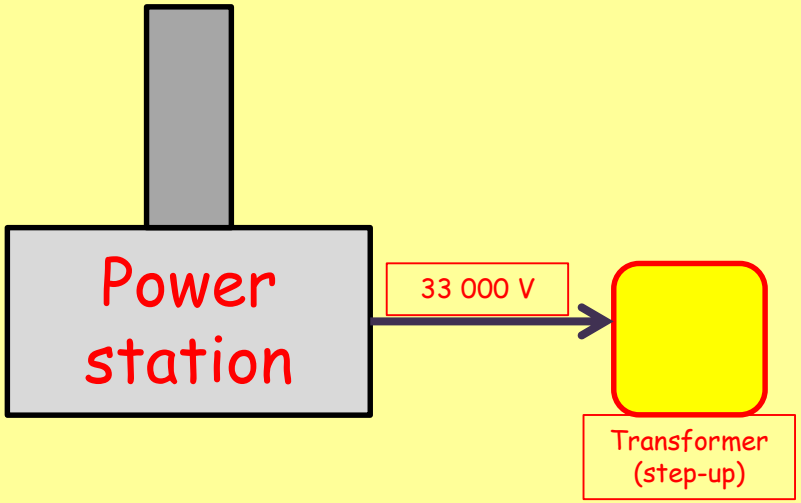

Transmission of electricity

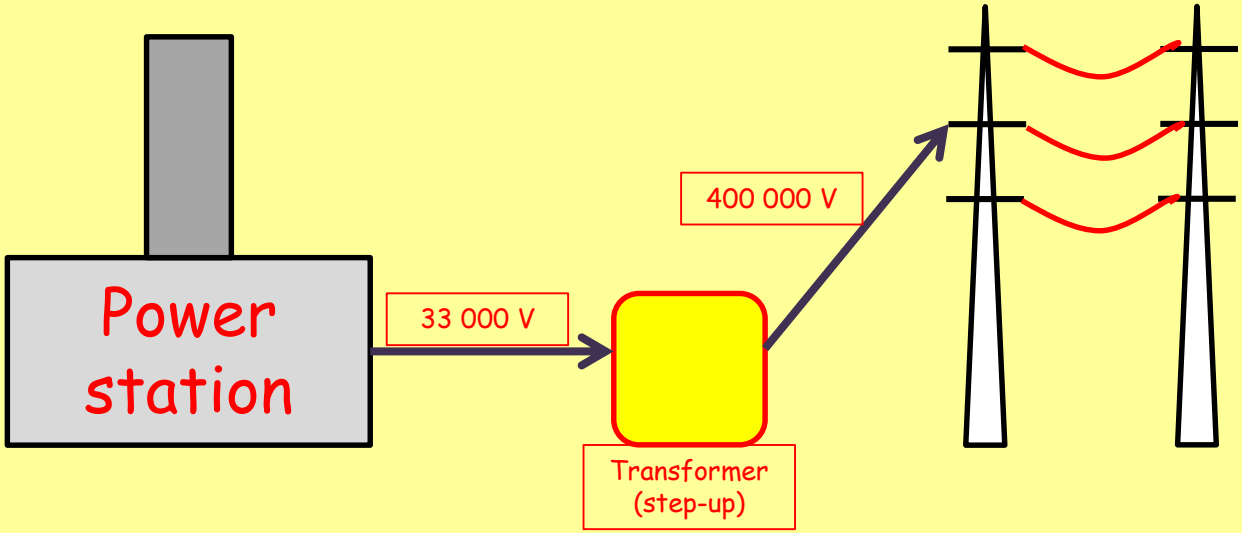

Transmission of electricity

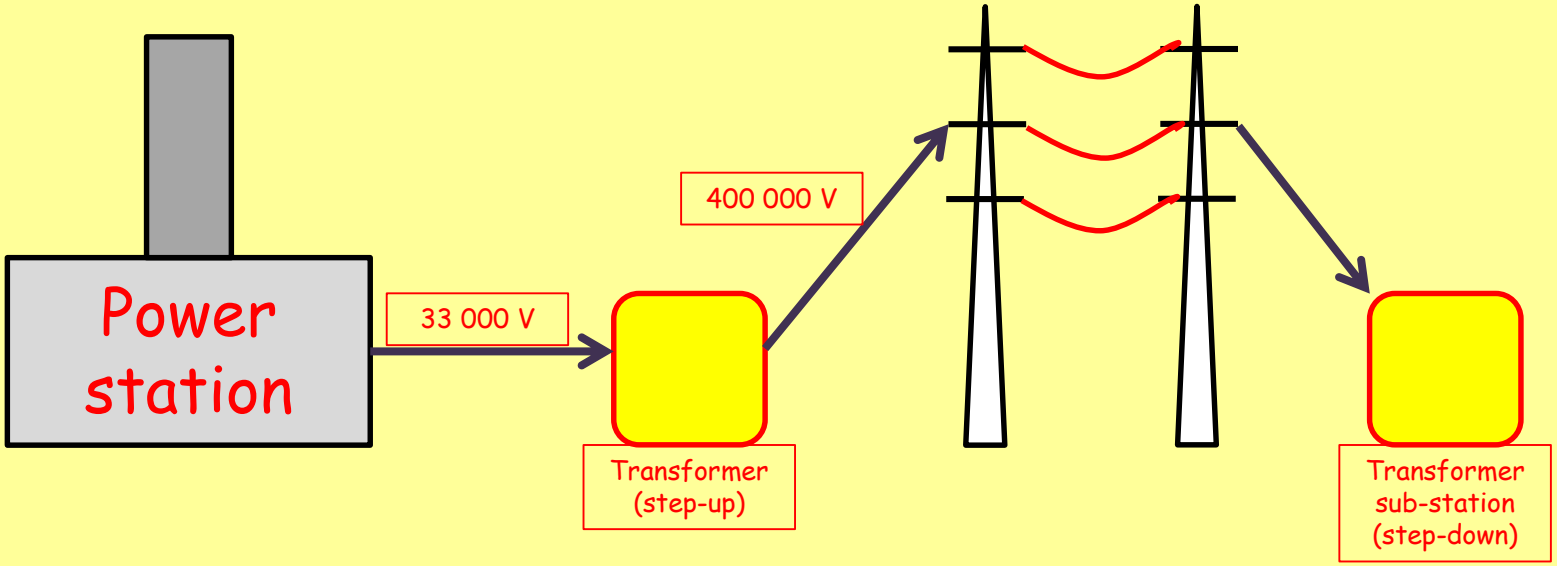

Transmission of electricity

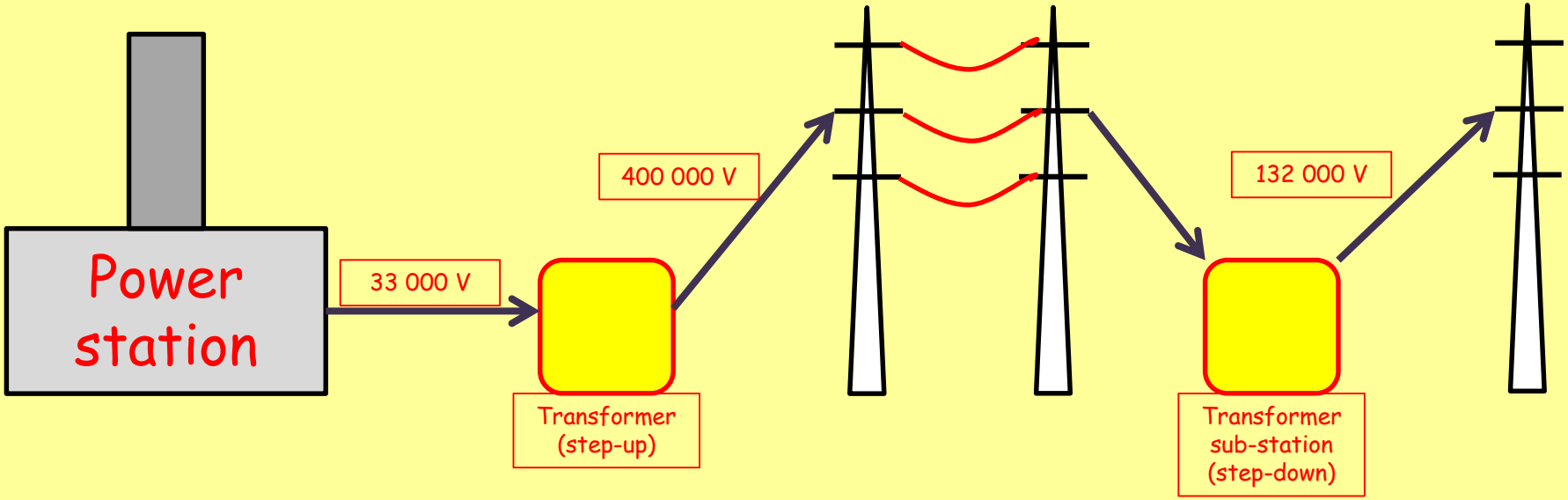

Transmission of electricity

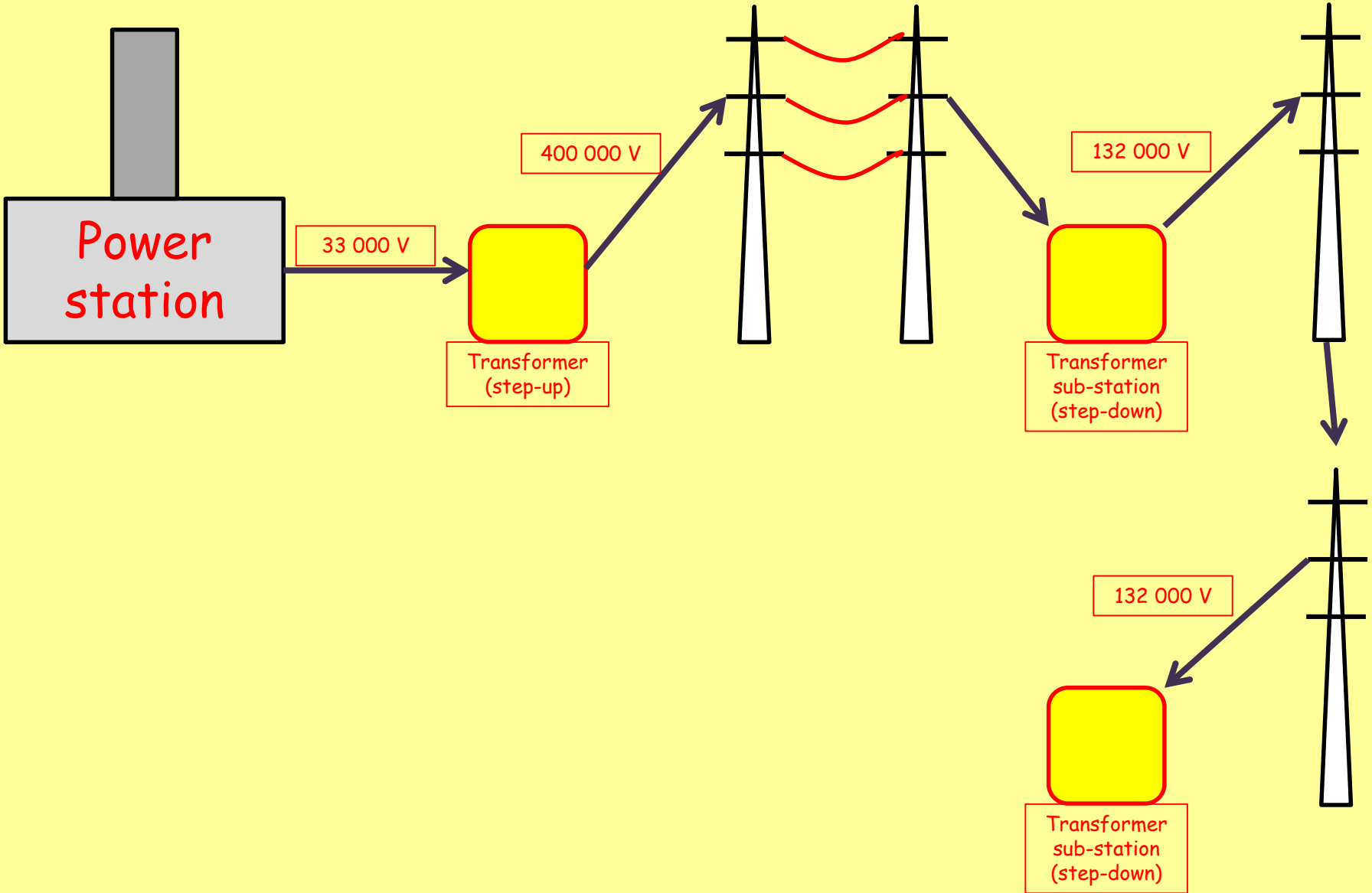

Transmission of electricity

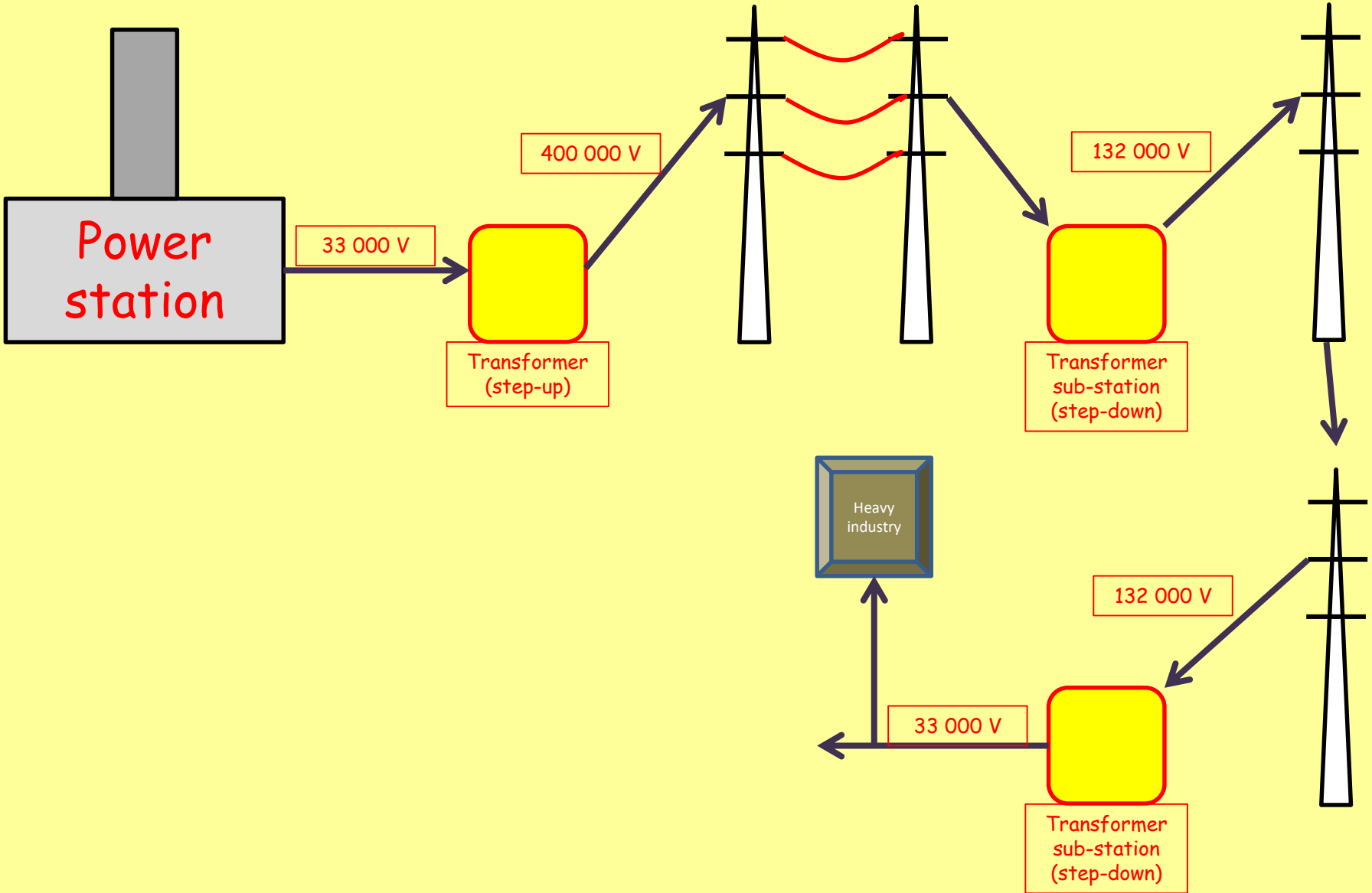

Transmission of electricity

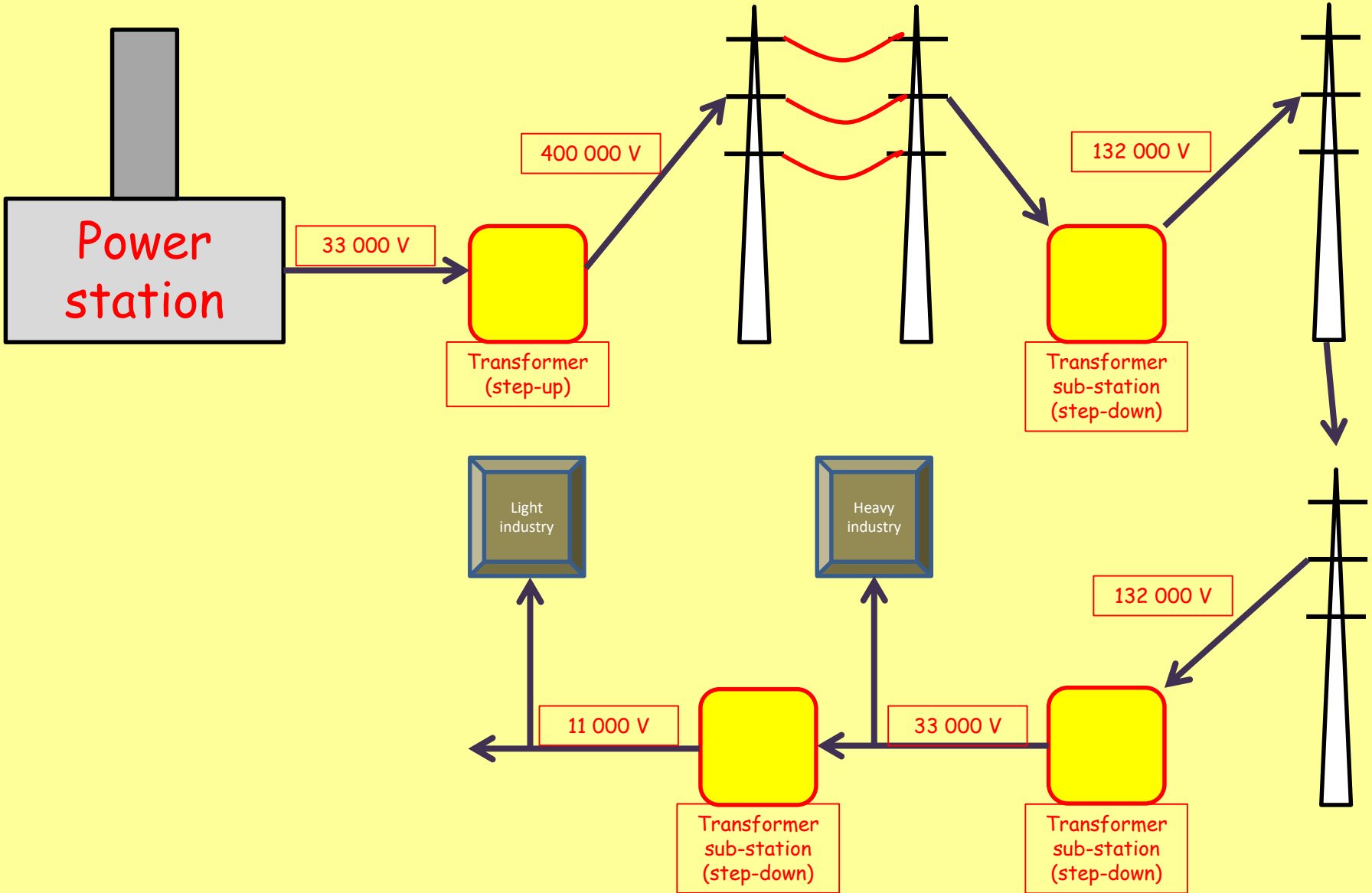

Transmission of electricity

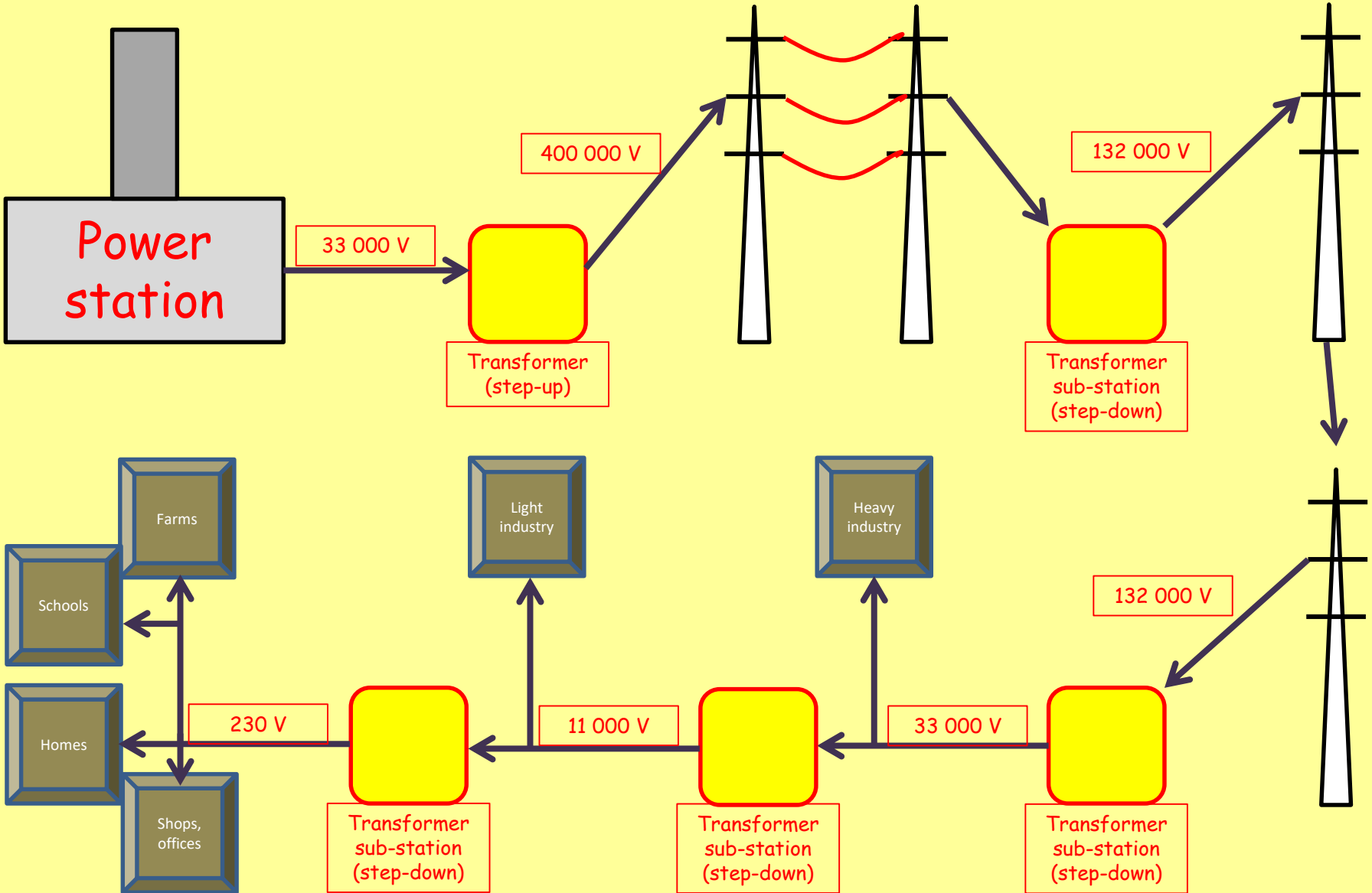

Transmission of electricity

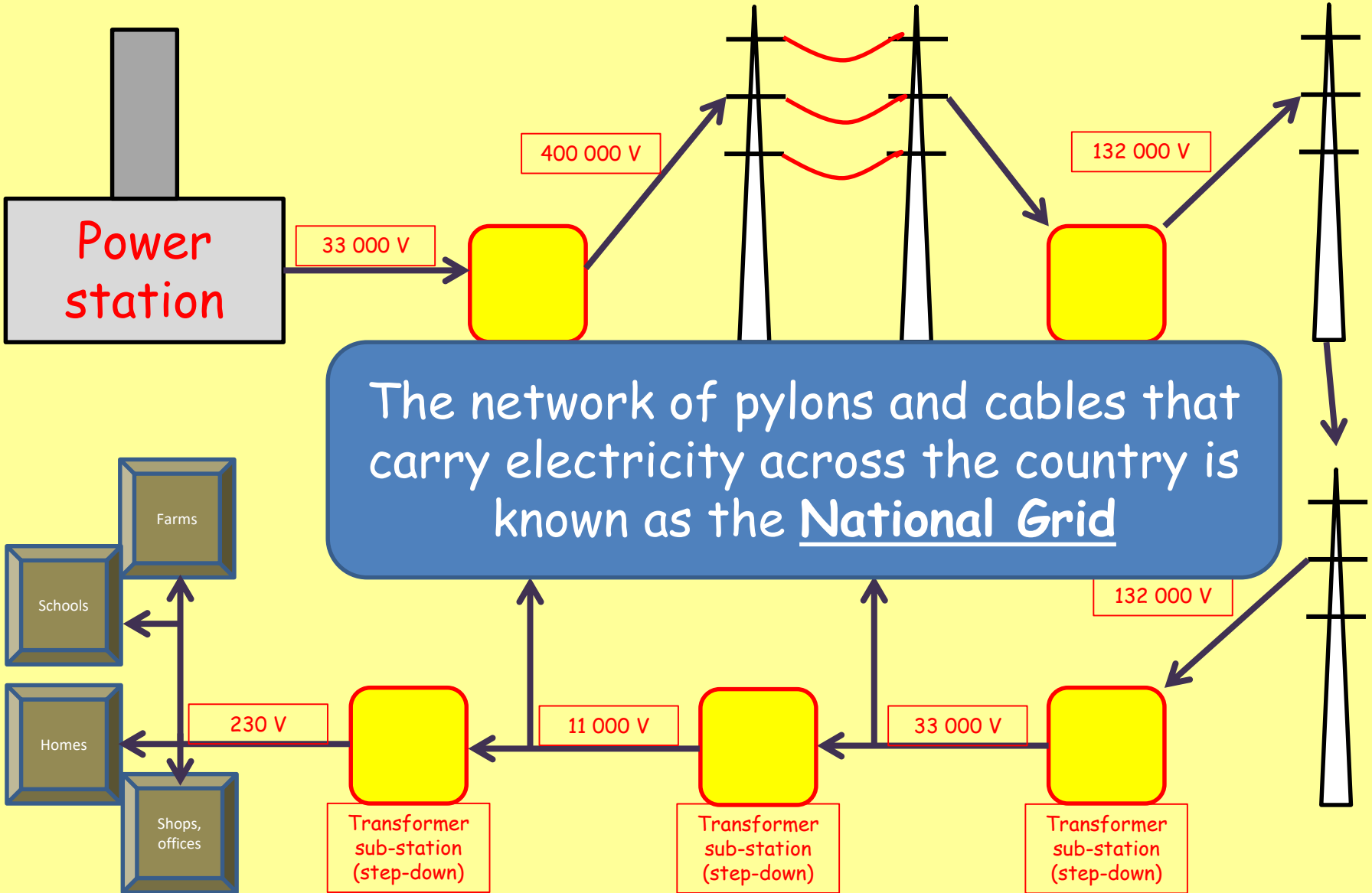

The network of pylons and cables that carry electricity across the country is known as the **National Grid**

Transmission of electricity

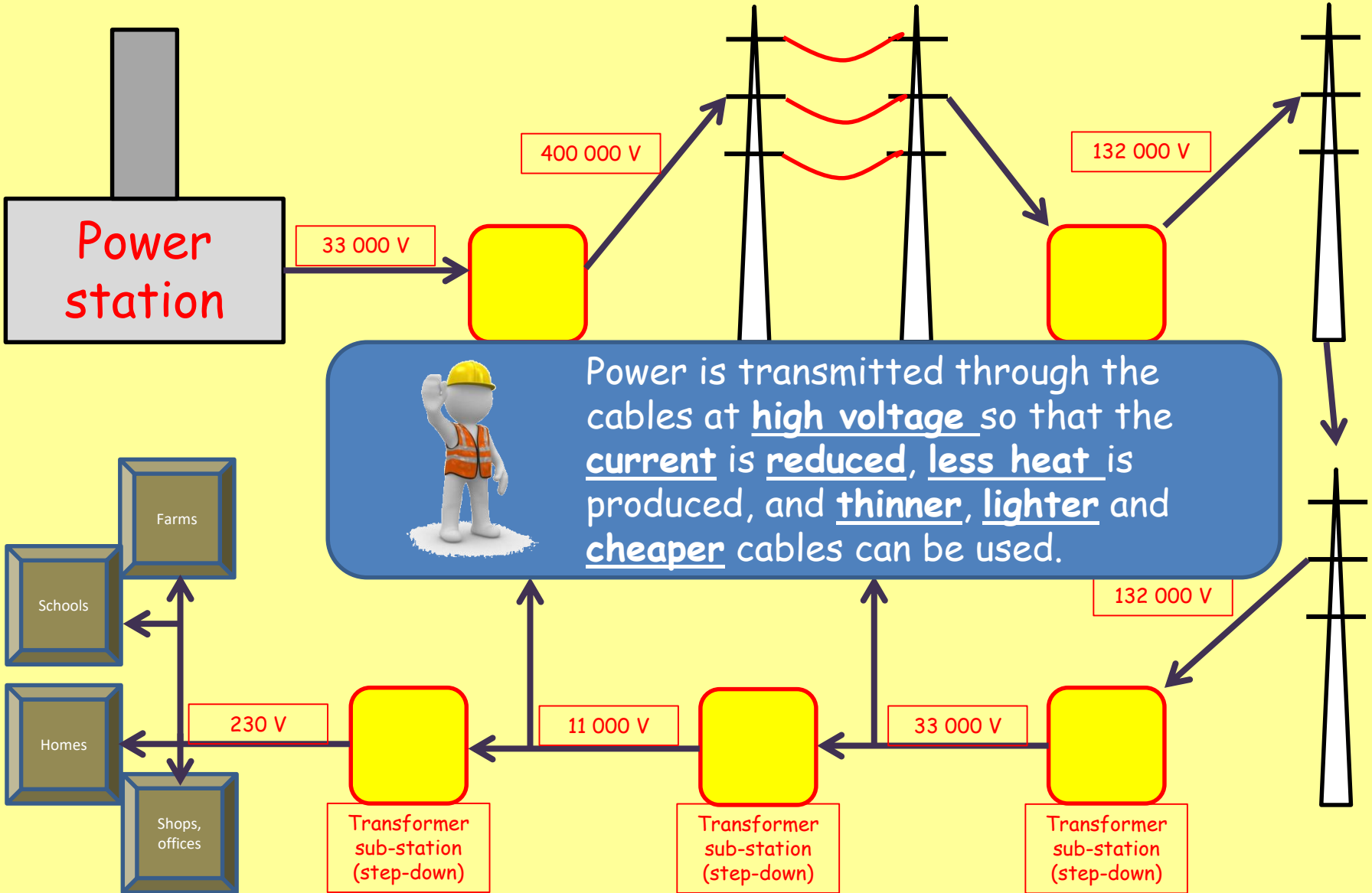

Power is transmitted through the cables at **high voltage** so that the **current** is **reduced**, **less heat** is produced, and **thinner**, **lighter** and **cheaper** cables can be used.

Transmission of electricity

So, what are transformers, and how do they work?

Transmission of electricity

So, what are transformers, and how do they work?

Transformers are used to increase or decrease voltages. Transformers **will not work** with DC.

A simple transformer

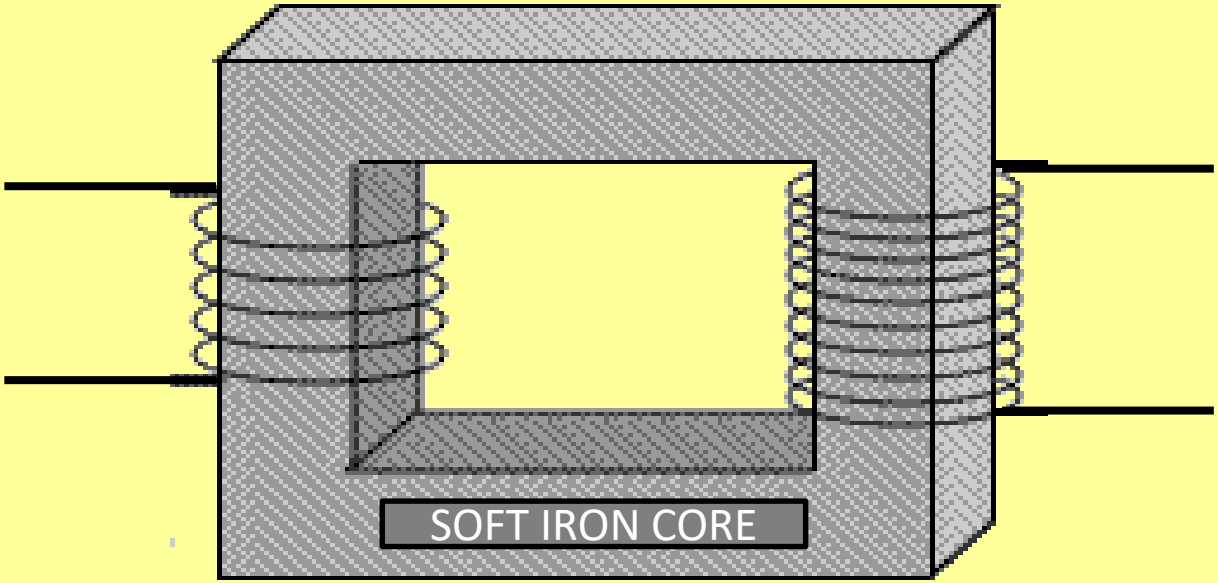

A simple transformer

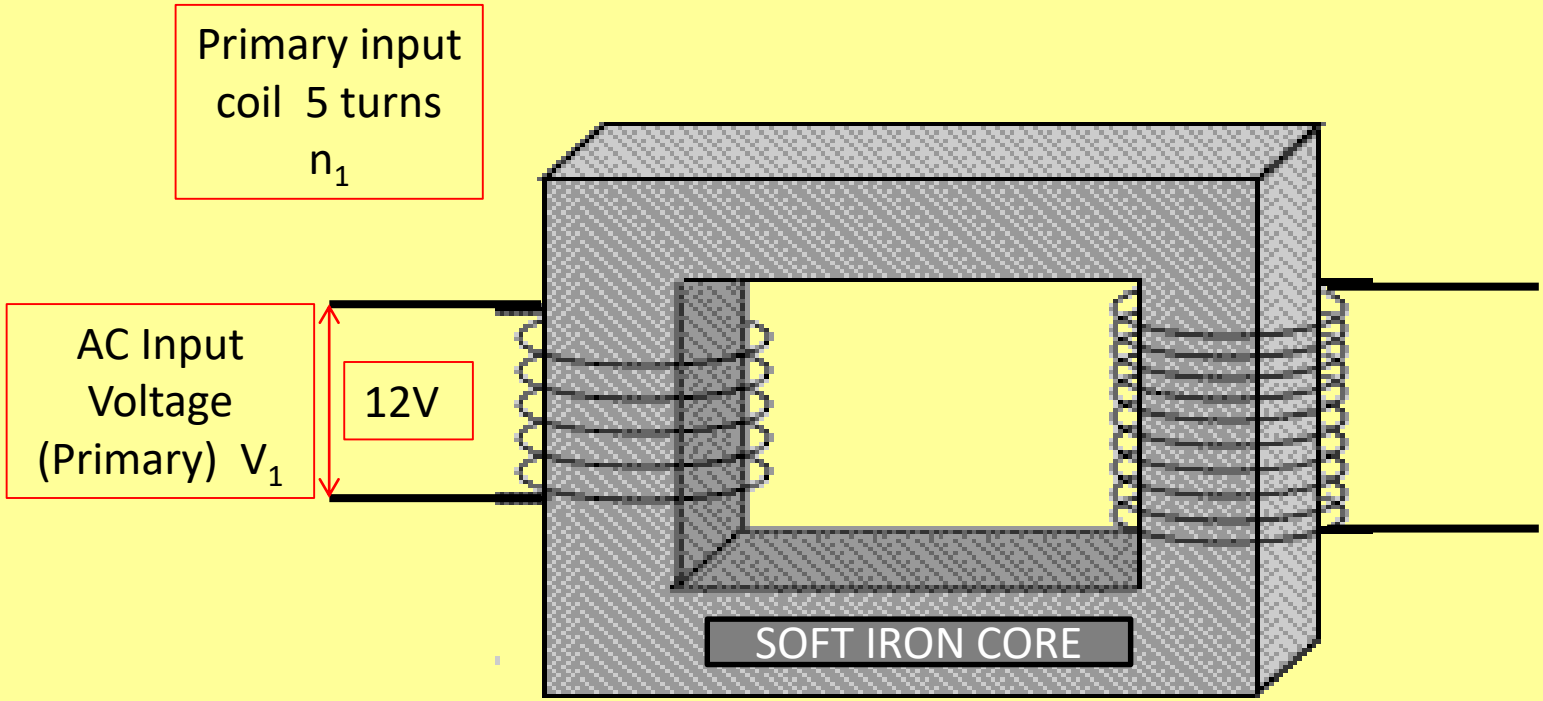

A simple transformer

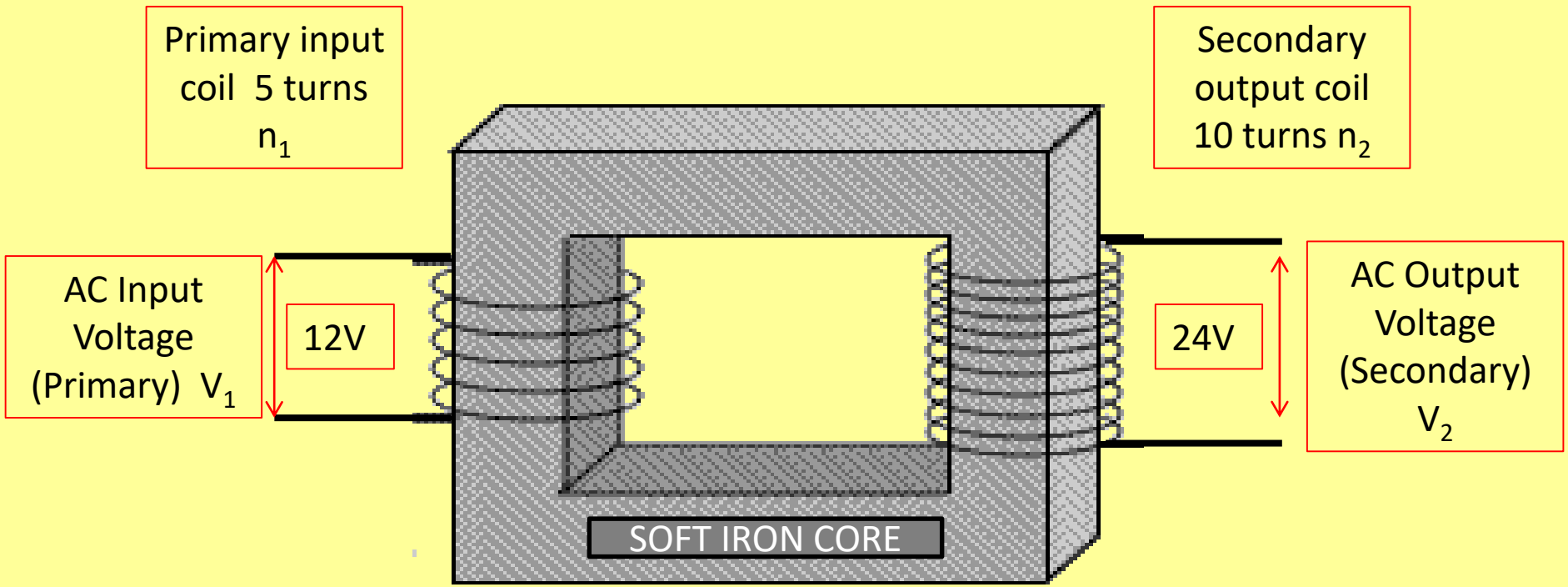

This is an example of a **STEP-UP transformer** – the voltage is **increased** between the primary and secondary coils.

A simple transformer

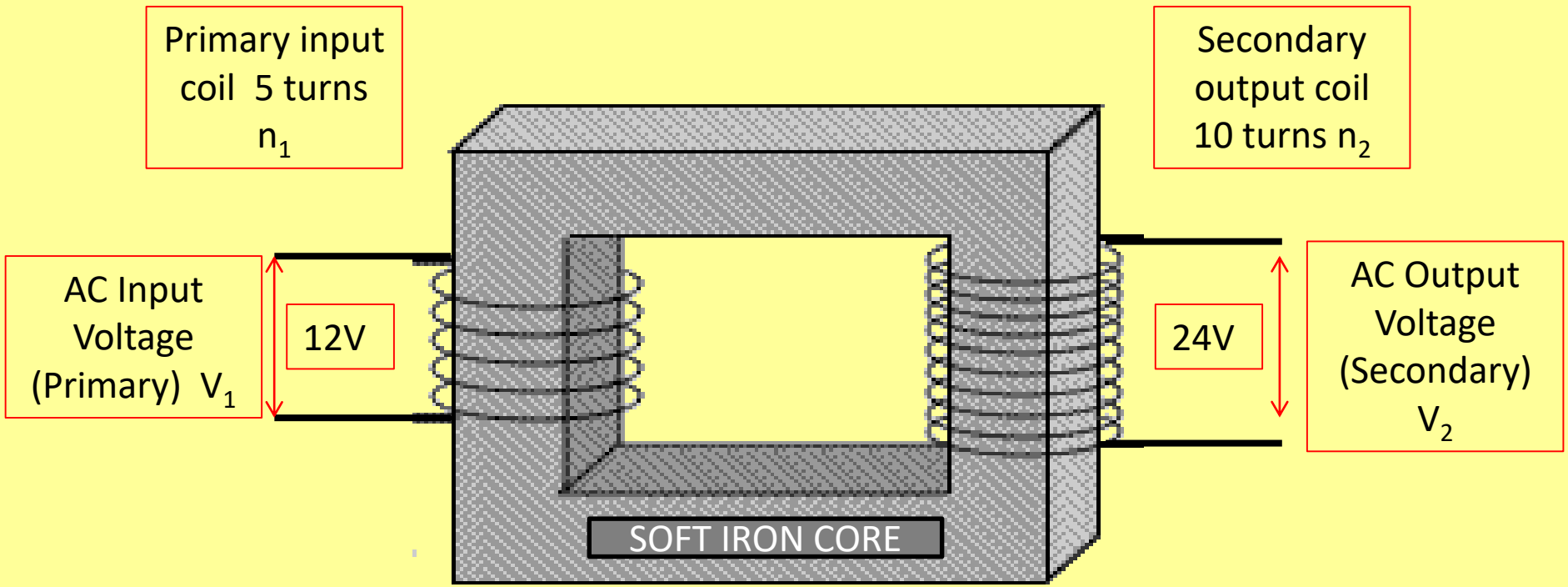

This is an example of a **STEP-UP transformer** – the voltage is **increased** between the primary and secondary coils. In a **STEP-DOWN transformer**, the voltage is **decreased**.

A simple transformer

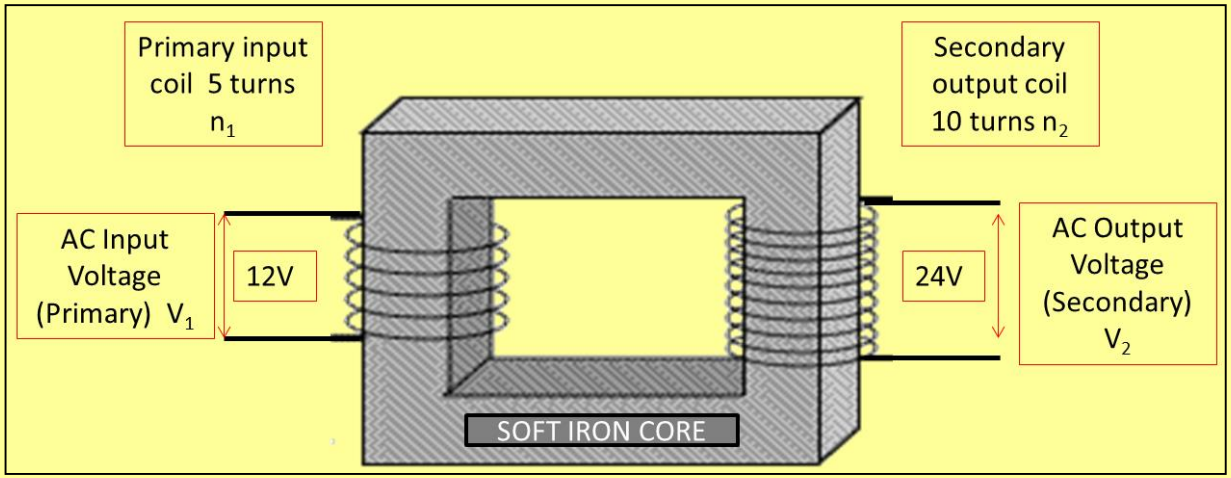

A simple transformer

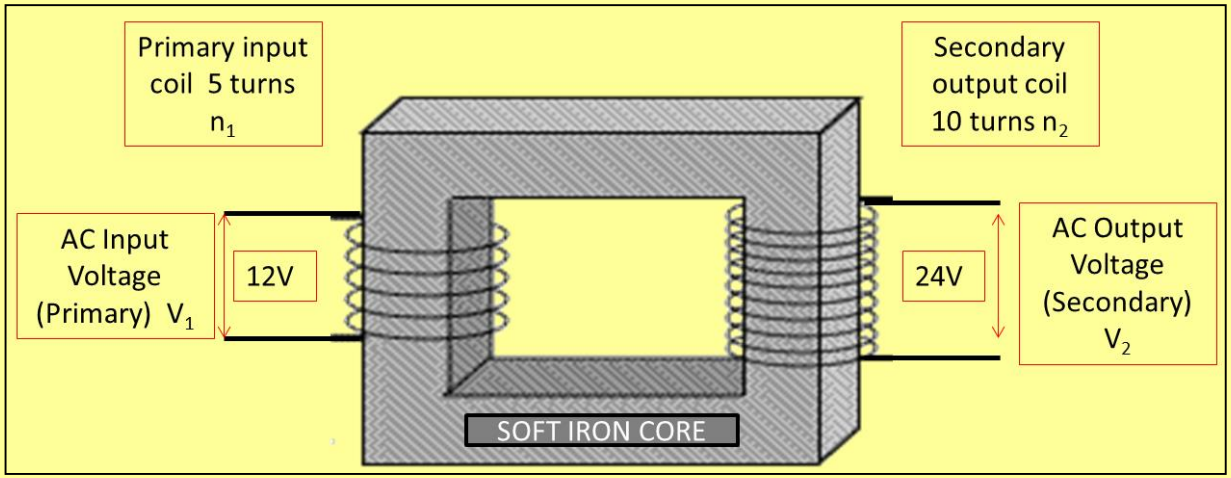

When **AC** flows through the **primary** coil, it sets up an **alternating magnetic field** in the soft iron core and, therefore, in the **secondary** coil. This changing field induces an **alternating voltage** in the **secondary** coil.

A simple transformer

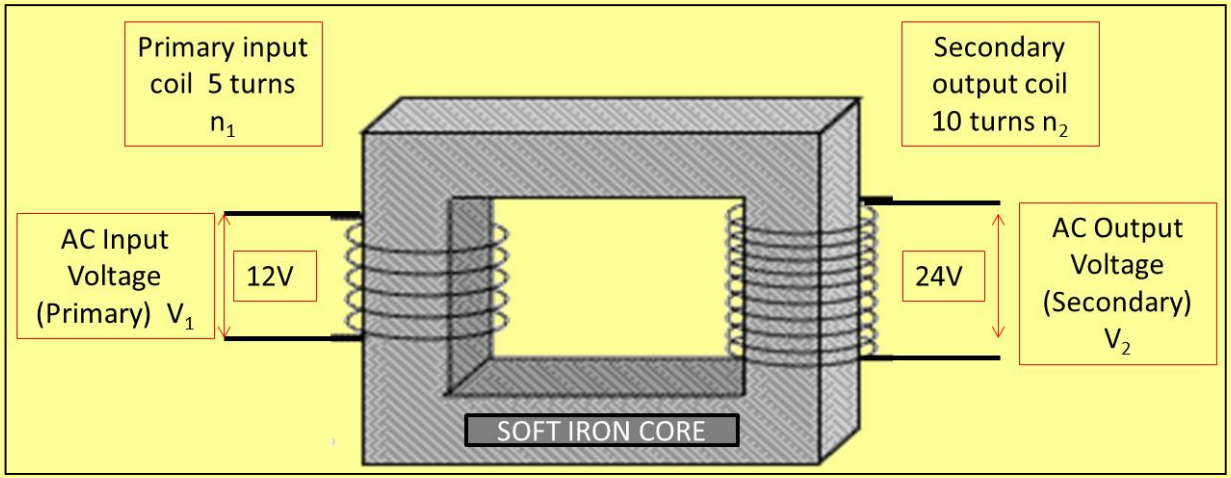

When **AC** flows through the **primary** coil, it sets up an **alternating magnetic field** in the soft iron core and, therefore, in the **secondary** coil. This changing field induces an **alternating voltage** in the **secondary** coil.

Provided **all field lines** pass through both coils, and there is **no heat loss**, the following equation applies:

$$\frac{\text{Output voltage}}{\text{Input voltage}} = \frac{\text{turns on output coil}}{\text{turns on input coil}}$$

$$\frac{V_2}{V_1} = \frac{n_2}{n_1}$$

A simple transformer

$$V_2 = \frac{n_2 \times V_1}{n_1}$$

$$n_2 = \frac{V_2 \times n_1}{V_1}$$

$$V_1 = \frac{n_1 \times V_2}{n_2}$$

$$n_1 = \frac{n_2 \times V_1}{V_2}$$

$$\frac{\text{Output voltage}}{\text{Input voltage}} = \frac{\text{turns on output coil}}{\text{turns on input coil}}$$

$$\frac{V_2}{V_1} = \frac{n_2}{n_1}$$

Eg. A transformer has 20 turns on the primary coil (input) and 10 turns on the secondary coil (output). If the input voltage is 50 volts, what is the output voltage?

A simple transformer

$$\frac{\text{Output voltage}}{\text{Input voltage}} = \frac{\text{turns on output coil}}{\text{turns on input coil}}$$

$$\frac{V_2}{V_1} = \frac{n_2}{n_1}$$

$$V_2 = \frac{n_2 \times V_1}{n_1}$$

$$n_2 = \frac{V_2 \times n_1}{V_1}$$

$$V_1 = \frac{n_1 \times V_2}{n_2}$$

$$n_1 = \frac{n_2 \times V_1}{V_2}$$

Eg. A transformer has 20 turns on the primary coil (input) and 10 turns on the secondary coil (output). If the input voltage is 50 volts, what is the output voltage?

$$V_1 = 50, \; n_1 = 20, \; n_2 = 10$$

$$V_2 = \frac{10 \times 50}{20} = 25 \text{ V}$$

The voltage has been reduced from 50V to 25V. This is an example of a STEP-DOWN transformer.

A simple transformer

Primary voltage V_1	Secondary voltage V_2	No. of turns on primary n_1	No. of turns on secondary n_2	Step up or step down?
12V	24V	100	?	?
400V	200V	20	?	?
25,000V	50,000V	1,000	?	?
23V	230V	150	?	?

A simple transformer

Primary voltage V_1	Secondary voltage V_2	No. of turns on primary n_1	No. of turns on secondary n_2	Step up or step down?
12V	24V	100	200	up
400V	200V	20	10	down
25,000V	50,000V	1,000	2000	Up
23V	230V	150	1500	Up

LEARNING OBJECTIVES

Core	Supplement
• Show understanding that a conductor moving across a magnetic field or a changing magnetic field linking with a conductor can induce an e.m.f. in the conductor • Describe an experiment to demonstrate electromagnetic induction • State the factors affecting the magnitude of an induced e.m.f. Distinguish between direct current (d.c.) and alternating current (a.c.) Describe the construction of a basic transformer with a soft-iron core, as used for voltage transformations • Recall and use the equation (Vp / Vs) = (Np / Ns) • Understand the terms step-up and step-down • Describe the use of the transformer in high-voltage transmission of electricity • Give the advantages of high-voltage transmission	Show understanding that a conductor moving across a magnetic field or a changing magnetic field linking with a conductor can induce an e.m.f. in the conductor • Describe an experiment to demonstrate electromagnetic induction • State the factors affecting the magnitude of an induced e.m.f. Describe and explain a rotating-coil generator and the use of slip rings • Sketch a graph of voltage output against time for a simple a.c. generator • Relate the position of the generator coil to the peaks and zeros of the voltage output Describe the principle of operation of a transformer • Recall and use the equation Ip Vp = Is Vs (for 100% efficiency) • Explain why power losses in cables are lower when the voltage is high

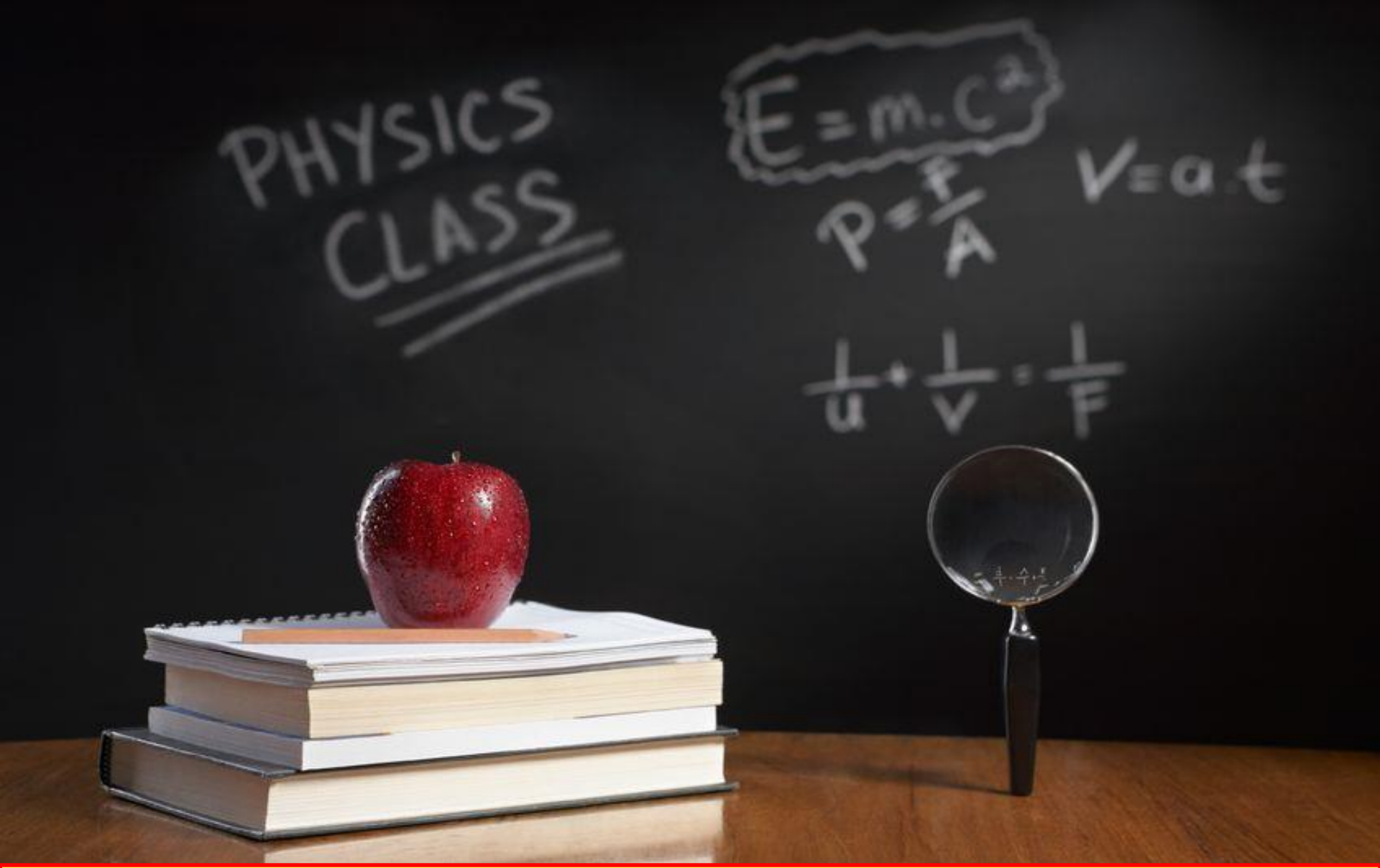

PHYSICS – Electromagnetic effects (1)